CITY OF PALM DESERT

PALMA VILLAGE PARK

SHADE STRUCTURE/ IMPROVEMENT PROJECT

73-690 DE ANZA WAY

APN NUMBERS

627-143-006, 627-143-007, 627-143-008, 627-143-009

LEGAL DESCRIPTION

LOTS 6, 7, 8, AND 9 OF BLOCK 5, PALMA VILLAGE UNIT #5 MB 020/040 O.R. RIV. CTY.

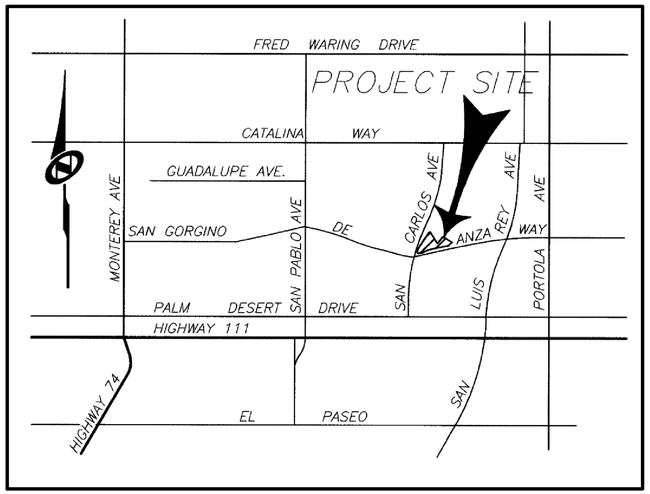

VICINITY MAP

PROJECT DIRECTORY

OWNER:
CITY OF PALM DESERT
CHRIS GERRY, PROJECT MANAGER
760-776-6335
EMAIL: CGERRY@PALMDESERT.GOV
73510 FRED WARING DRIVE
PALM DESERT, CA, 92260

LANDSCAPE ARCHITECT:
IN-SITE LANDSCAPE ARCHITECTURE, INC.
2907 SHELTER ISLAND DRIVE #105-417
SAN DIEGO, CA 92106
619-795-7603
CONTACT: TIM JACHLEWSKI
EMAIL: TIM@INSITELANDARCH.COM
RON MORENO
EMAIL: RON@INSITELANDARCH.COM

GEOTECHNICAL CONSULTANT:
LEIGHTON CONSULTING, INC.
41945 BOARDWALK, SUITE V
PALM DESERT, CA 92211
PHONE; 760-776-4192
CONTACT: BRENT ADAM, PG, CEG
EMAIL: BADAM@LEIGHTONGROUP.COM

ELECTRICIAN
PALMER ELECTRIC
CONTACT: LARRY PALMER
760-797-7878
INFO@PALMERELECTRICCO.COM

SHEET INDEX

CONSTRUCTION OBSERVATION SCHEDULE

LANDSCAPE CONSTRUCTION OBSERVATIONS:		NOTIFICATION TIME
1.	PRE-CONSTRUCTION CONFERENCE	7 DAYS
2.	CONCRETE FORMWORK AND SUB-GRADE	48 HOURS
3.	CONCRETE FOOTINGS	48 HOURS
4.	CONCRETE FINISH AND ELEVATIONS	48 HOURS
5.	UTILITY TRENCHES	48 HOURS
6.	FINAL PUNCH WALK	7 DAYS

IRRIGATION OBSERVATIONS:		NOTIFICATION TIME
1.	PRE-CONSTRUCTION CONFERENCE	7 DAYS
2.	MAINLINE/VALVE LAYOUT	48 HOURS
3.	PRESSURE LINE/WIRING INSTALLATION AND TESTING	48 HOURS
4.	LATERAL LINE AND SPRINKLER INSTALLATION	48 HOURS
5.	COVERAGE TEST	48 HOURS
7.	FINAL PUNCH WALK	7 DAYS

PLANTING OBSERVATIONS:		NOTIFICATION TIME
1.	FINISH GRADING	48 HOURS
2.	SOIL PREPARATION & WEED-ABATEMENT	48 HOURS
3.	TREE AND SHRUB LAYOUT	48 HOURS
4.	PLANT MATERIAL REVIEW	48 HOURS
5.	TREE AND SHRUB LOCATIONS (IN THEIR CONTAINERS)	48 HOURS
6.	FINAL GRADE PRIOR TO MULCHING OR SEEDING	48 HOURS
7.	FINAL PUNCH WALK	7 DAYS

90-DAY MAINTENANCE OBSERVATIONS		NOTIFICATION TIME
1.	90-DAY FINAL PUNCH WALK	7 DAYS

CONTRACTOR MUST BE ON SITE FOR ALL OBSERVATIONS.

AT THEIR DISCRETION, THE LANDSCAPE ARCHITECT MAY WAIVE OBSERVATIONS AND MAY INSTEAD REQUEST DIGITAL PHOTOS FROM THE CONTRACTOR.

AMERICANS WITH DISABILITIES ACT COMPLIANCE

1. ALL SLOPES SHOWN ON THIS PLAN WERE DESIGNED AT OR BELOW MAXIMUMS ALLOWED BY THE AMERICANS WITH DISABILITY ACT ACCESS GUIDE (A.D.A.A.G.) IN ORDER TO ALLOW F OR CONSTRUCTION TOLERANCES. IT IS THE CONTRACTORS RESPONSIBILITY TO FAMILIARIZE THEMSELVES WITH A.D.A.A.G. AND IN THE EVENT THAT A DESIGN QUESTION SHOULD ARISE, OR A FIELD CONDITION PRESENT ITSELF THAT IS DIFFERENT THAN SHOWN ON THESE PLANS, WORK SHOULD CEASE AND THE ENGINEER BE NOTIFIED SO THAT AN ACCEPTABLE SOLUTION CAN BE DETERMINED.
2. THE CONTRACTOR IS ADVISED TO CAREFULLY CHECK ALL PHASES OF WORK RELATING TO A.D.A.A.G. ACCESS FOR THIS PROJECT. SINCE THE CODE DOES NOT ALLOW FOR A CONSTRUCTION TOLERANCE, ANY CONSTRUCTION THAT EXCEEDS MAXIMUM OR MINIMUM DIMENSIONS AND SLOPES AS CALLED OUT BY A.D.A.A.G. ARE SUBJECT TO REJECTIONS BY THE OWNER AND MAY BE REQUIRED TO BE REMOVED AND REPLACED.
3. SINCE THE CIVIL ENGINEER, LANDSCAPE ARCHITECT, OR SURVEYOR CANNOT CONTROL THE EXACT METHODS OR MEANS USED BY THE GENERAL CONTRACTOR OR THEIR SUB-CONTRACTOR DURING GRADING AND CONSTRUCTION OF THE PROJECT, THE CIVIL ENGINEER, LANDSCAPE ARCHITECT, OR SURVEYOR ASSUMES NO RESPONSIBILITY FOR FINAL ACCEPTANCE OF A.D.A.A.G. RELATED ITEMS OF THIS PROJECT BY THE OWNER, ANY OTHER AUTHORITY OR OTHER AFFECTED PARTIES.

COMPLIANCE WITH A.D.A.A.G. CONSTRUCTION REQUIREMENTS WILL BE THE SOLE RESPONSIBILITY OF THE GENERAL CONTRACTOR AND THEIR SUB-CONTRACTOR(S).

MANUFACTURER LEAD TIMES

CONTRACTOR SHALL VERIFY LEAD TIMES WITH ALL MANUFACTURERS UPON RECEIPT OF CONTRACT AND SHALL ORDER ALL PRODUCTS WITH AMPLE TIME TO MEET SCHEDULE.

HOLD HARMLESS & INDEMNIFICATION CLAUSE

CONTRACTOR AGREES TO ASSUME SOLE RESPONSIBILITY FOR JOB SITE CONDITIONS DURING THE COURSE OF CONSTRUCTION OF THIS PROJECT, INCLUDING SAFETY OF ALL PERSONS AND PROPERTY; THAT THIS REQUIREMENT SHALL APPLY CONTINUOUSLY AND NOT BE LIMITED TO NORMAL WORKING HOURS, AND THAT THE CONTRACTOR SHALL DEFEND, INDEMNIFY, AND HOLD THE OWNER/DEVELOPER, THE COUNTY/ CITY OF LOCAL JURISDICTION AND THE LANDSCAPE ARCHITECT AND IT'S CONSULTANTS HARMLESS FROM ANY AND ALL LIABILITY REAL OR ALLEGED IN CONNECTION WITH THE PERFORMANCE OF WORK ON THIS PROJECT, EXCEPTING FOR LIABILITY ARISING FROM SOLE NEGLIGENCE OF THE OWNER/DEVELOPER, COUNTY/ CITY OF LOCAL JURISDICTION AND THE LANDSCAPE ARCHITECT AND IT'S CONSULTANTS.

CITY PLAN REVIEW SUBMITTAL DATES:

10/31/23	1ST	30% CD'S
11/17/23	2ND	90% CD'S
12/12/23	3RD	100% CD'S

DIGALERT
DIAL BEFORE YOU DIG TOLL FREE
TWO WORKING DAYS BEFORE YOU DIG
A PUBLIC SEVICE BY UNDERGROUND SERVICE ALERT 1-800-227-2600

NO.	REVISIONS	APPROVED	DATE

IN-SITE LANDSCAPE ARCHITECTURE, INC.
2907 Shelter Island Drive #105-417
San Diego, CA 92106 619-795-7603 www.insitelandarch.com

DRAWN BY RM/TJ
CHECKED BY TJ

LICENSED LANDSCAPE ARCHITECT Tim Jachlewski No. 4847 11-30-23 12-12-23 STATE OF CALIFORNIA

APPROVED BY CITY OF PALM DESERT
DATE

CITY OF PALM DESERT, CALIFORNIA
PALMA VILLAGE PARK – SHADE STRUCTURE PROJECT
TITLE SHEET
PORTION OF N 1/2 OF SEC. 15, T. 5 S., R. 7 E., S.B.M.

SHEET 1 OF 17 SHEETS

DATE: 12-12-23 100% CONSTRUCTION DOCUMENTS

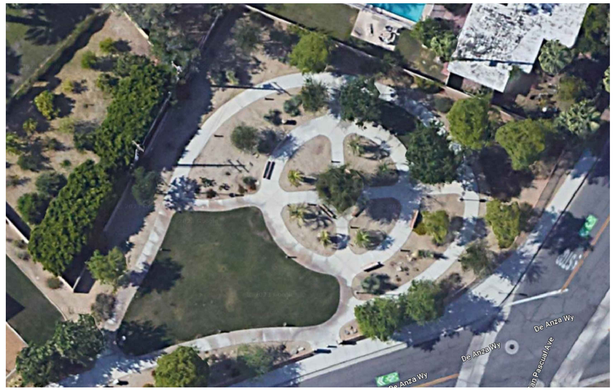

EXISTING AERIAL PHOTO

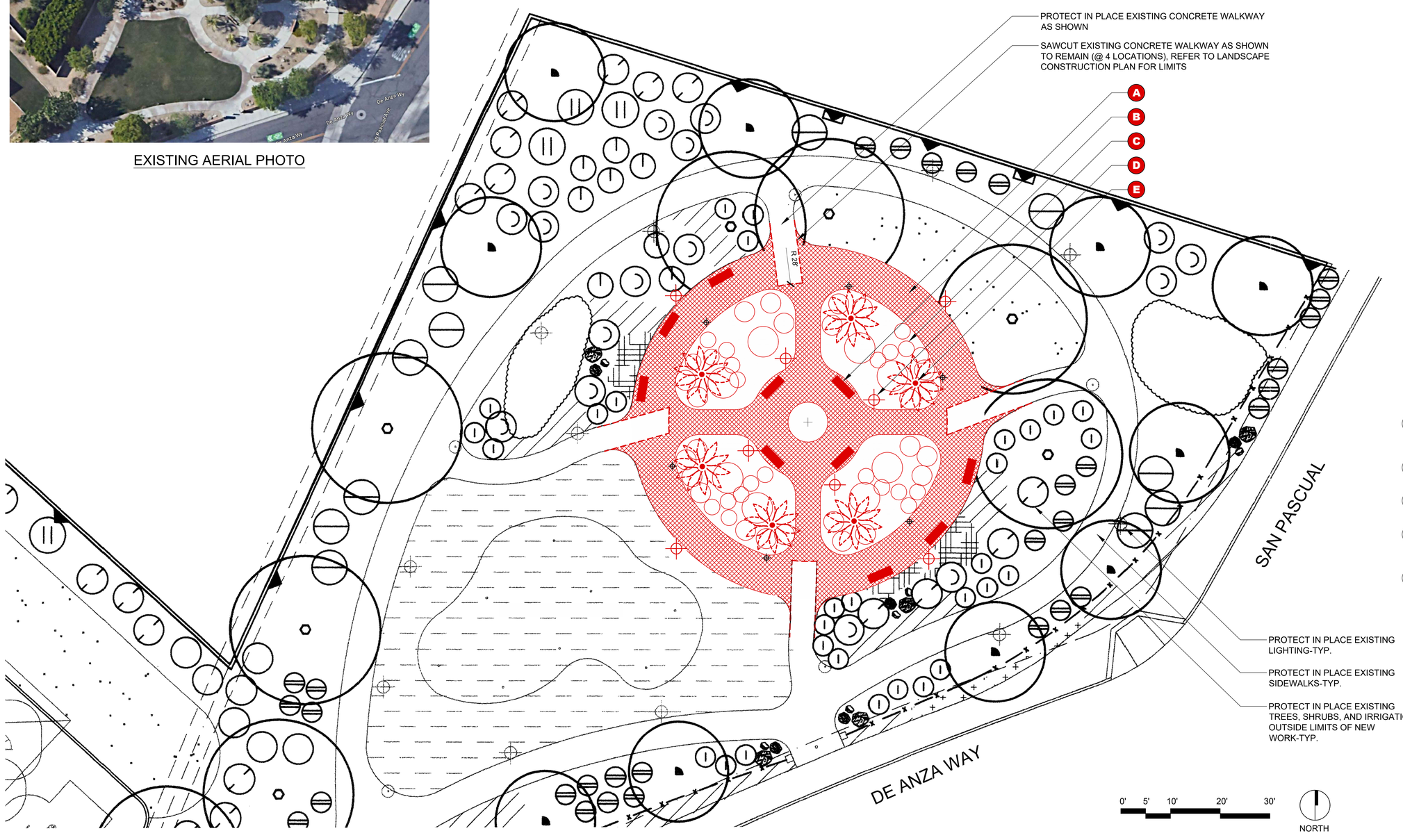

DEMOLITION NOTES

1. THESE PLANS WERE PREPARED USING THE ORIGINAL CONSTRUCTION PLANS PROVIDED BY THE CITY OF PLAM DESERT. THE CONTRACTOR IS RESPONSIBLE FOR VERIFYING THE ACCURACY OF THE PLANS COMPARED TO ACTUAL FIELD CONDITIONS PRIOR TO ORDERING MATERIALS AND BEGINNING WORK. IF THERE ARE DISCREPANCIES BETWEEN THE PLANS AND FIELD CONDITIONS, THE CONTRACTOR SHALL NOTIFY THE LANDSCAPE ARCHITECT OF RECORD TO WORK OUT A SOLUTION AGREEABLE TO THE OWNER. IF THE CONTRACTOR FAILS TO NOTIFY THE LANDSCAPE ARCHITECT OF RECORD OF THE DISCREPANCIES PRIOR TO BEGINNING WORK, THE CONTRACTOR SHALL BE RESPONSIBLE FOR ANY ADDITIONAL LABOR AND MATERIALS AS DIRECTED BY THE LANDSCAPE ARCHITECT OF RECORD TO RESOLVE SUCH DISCREPANCIES AT NO ADDITIONAL COST TO THE OWNER.
2. THE CONTRACTOR IS RESPONSIBLE FOR DETERMINING THE LOCATION OF ALL UTILITIES PRIOR TO ORDERING MATERIALS AND BEGINNING WORK. THE CONTRACTOR SHALL CLEARLY MARK ALL UTILITIES AND SHALL BE RESPONSIBLE FOR PRESERVING ALL UTILITIES THROUGHOUT CONSTRUCTION. THE CONTRACTOR SHALL ASSUME FULL RESPONSIBILITY FOR REPAIRING DAMAGED UTILITIES AT NO ADDITIONAL COST TO OWNER.
3. THE CONTRACTOR SHALL BE RESPONSIBLE FOR REPAIRING OR REPLACING ANY EQUIPMENT AND MATERIALS DAMAGED DURING CONSTRUCTION WITHIN OR OUTSIDE THE PROJECT LIMIT OF WORK.
4. THE CONTRACTOR IS RESPONSIBLE FOR COORDINATING AND VERIFYING ALL CONDUIT AND IRRIGATION SLEEVES WITH OTHER CONSTRUCTION TRADE CONTRACTORS.
5. REFER TO SPECIFICATIONS FOR ADDITIONAL REQUIREMENTS.

DEMO. / SALVAGE CALLOUTS

A. REMOVE AND LEGALLY DISPOSE OFF-SITE CONCRETE PAVEMENT (SEE NOTES REGARDING SAW CUTTING AND PROTECTING IN PLACE PORTIONS TO REMAIN.)

B. REMOVE AND SALVAGE EXISTING BENCHES (10 TOTAL), DELIVER TO CITY OF PALM DESERT

C. REMOVE AND LEGALLY DISPOSE OFF-SITE EXISTING SHRUBS

D. REMOVE AND SALVAGE EXISTING LIGHTS (8 TOTAL) PER ELECTRICIAN (PALMER ELECTRIC). COORDINATE SEQUENCING WITH ELECTRICIAN.

E. REMOVE AND AND LEGALLY DISPOSE THE EXISTING PINDO PALMS (6 TOTAL).

DATE: 12-12-23 100% CONSTRUCTION DOCUMENTS

NO.	REVISIONS	APPROVED	DATE

IN-SITE LANDSCAPE ARCHITECTURE, INC.
2907 Shelter Island Drive #105-417
San Diego, CA 92106 619-795-7603 www.insitelandarch.com

DRAWN BY RM/TJ
CHECKED BY TJ

REGISTERED LANDSCAPE ARCHITECT — Tom Jachlewski Jr. — No. 4347 — 12-12-23 — STATE OF CALIFORNIA

APPROVED BY CITY OF PALM DESERT

DATE

CITY OF PALM DESERT, CALIFORNIA
PALMA VILLAGE PARK – SHADE STRUCTURE PROJECT
DEMOLITION PLAN
PORTION OF N 1/2 OF SEC. 15, T. 5 S., R. 7 E., S.B.M.

NOTE: CONTRACTOR TO COORDINATE OVERHEAD LIGHTING IN PAVILION STRUCTURE. PROVIDE STUB-OUTS AS NEEDED.

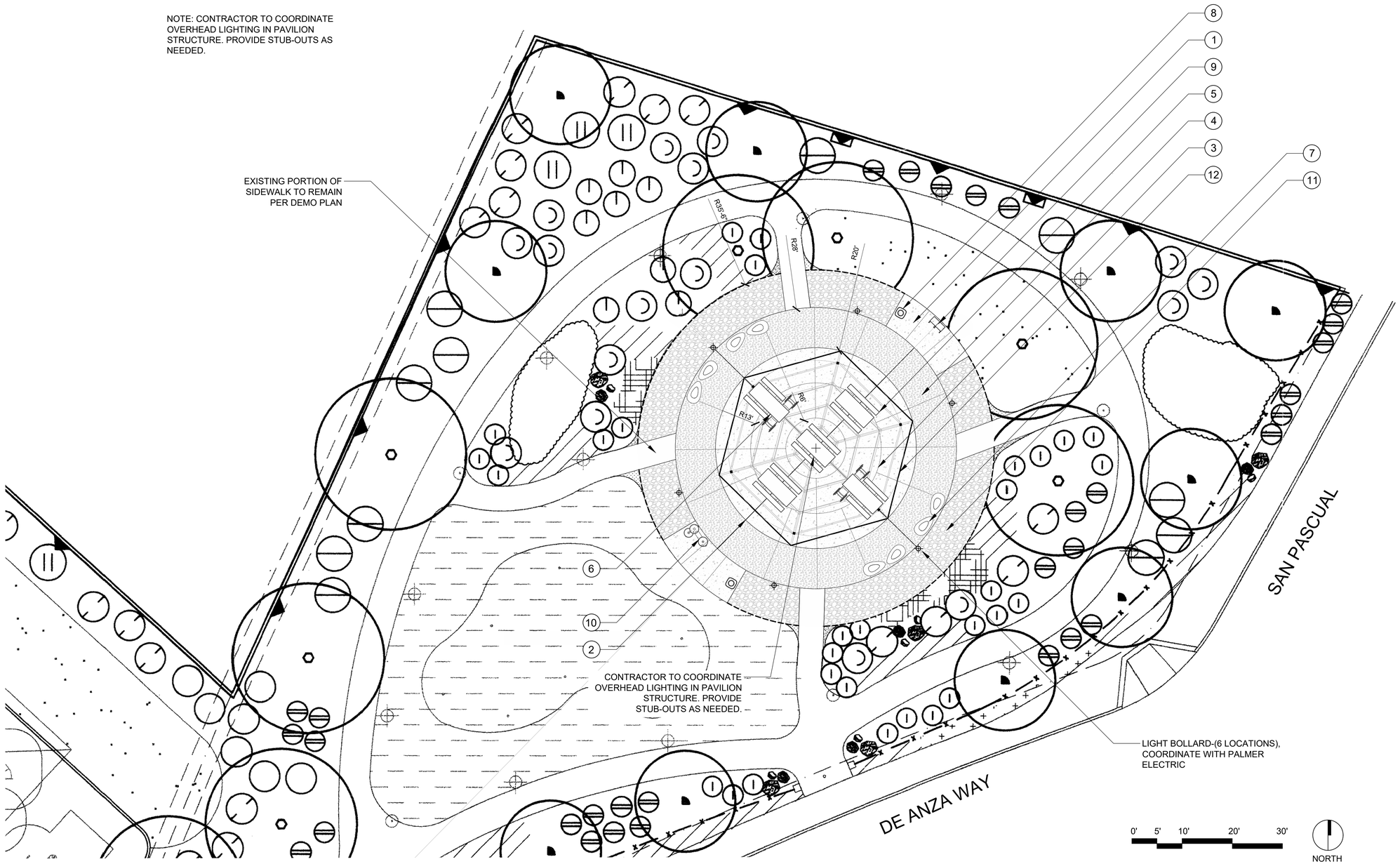

CONSTRUCTION NOTES

1. THESE PLANS WERE PREPARED USING THE ORIGINAL CONSTRUCTION PLANS PROVIDED BY THE CITY OF PLAM DESERT. THE CONTRACTOR IS RESPONSIBLE FOR VERIFYING THE ACCURACY OF THE PLANS COMPARED TO ACTUAL FIELD CONDITIONS PRIOR TO ORDERING MATERIALS AND BEGINNING WORK. IF THERE ARE DISCREPANCIES BETWEEN THE PLANS AND FIELD CONDITIONS, THE CONTRACTOR SHALL NOTIFY THE LANDSCAPE ARCHITECT OF RECORD TO WORK OUT A SOLUTION AGREEABLE TO THE OWNER. IF THE CONTRACTOR FAILS TO NOTIFY THE LANDSCAPE ARCHITECT OF RECORD OF THE DISCREPANCIES PRIOR TO BEGINNING WORK, THE CONTRACTOR SHALL BE RESPONSIBLE FOR ANY ADDITIONAL LABOR AND MATERIALS AS DIRECTED BY THE LANDSCAPE ARCHITECT OF RECORD TO RESOLVE SUCH DISCREPANCIES AT NO ADDITIONAL COST TO THE OWNER.
2. THE CONTRACTOR IS RESPONSIBLE FOR DETERMINING THE LOCATION OF ALL UTILITIES PRIOR TO ORDERING MATERIALS AND BEGINNING WORK. THE CONTRACTOR SHALL CLEARLY MARK ALL UTILITIES AND SHALL BE RESPONSIBLE FOR PRESERVING ALL UTILITIES THROUGHOUT CONSTRUCTION. THE CONTRACTOR SHALL ASSUME FULL RESPONSIBILITY FOR REPAIRING DAMAGED UTILITIES AT NO ADDITIONAL COST TO OWNER.
3. THE CONTRACTOR SHALL BE RESPONSIBLE FOR REPAIRING OR REPLACING ANY EQUIPMENT AND MATERIALS DAMAGED DURING CONSTRUCTION WITHIN OR OUTSIDE THE PROJECT LIMIT OF WORK.
4. THE CONTRACTOR IS RESPONSIBLE FOR COORDINATING AND VERIFYING ALL CONDUIT AND IRRIGATION SLEEVES WITH OTHER CONSTRUCTION TRADE CONTRACTORS.
5. REFER TO SPECIFICATIONS FOR ADDITIONAL REQUIREMENTS.

CONSTRUCTION CALLOUTS

1. CONCRETE PAVEMENT - INTEGRAL COLOR: DAVIS "ADOVE", FINISH: TOPCAST #003, SEE DETAIL C-01
2. EXPANSION JOINT, SEE DETAIL C-02
3. SAWCUT CONTROL JOINT, SEE DETAIL C-03
4. CONCRETE PAVEMENT - INTEGRAL COLOR: DAVIS "SANDSTONE", FINISH: TOPCAST #050, SEE DETAIL C-01
5. PICNIC TABLE-STANDARD (3 TOTAL), SEE DETAIL C-05
6. PICNIC TABLE-ADA (2 TOTAL), SEE DETAIL C-06
7. KERNEL BENCH (8 TOTAL), SEE DETAIL C-07
8. TRASH RECEPTACLE (2 TOTAL), SEE DETAIL C-08
9. BBQ GRILL (1 TOTAL), SEE DETAIL C-09
10. DRINKING FOUNTAIN (1 TOTAL), SEE DETAIL C-10
11. DECORATIVE ROCK MULCH WITH ALUMINUM EDGING, SEE DETAIL C-11
12. SHADE STRUCTURE (1 TOTAL), SEE DETAIL C-12

DATE: 12-12-23 100% CONSTRUCTION DOCUMENTS

NO.	REVISIONS	APPROVED	DATE

IN-SITE LANDSCAPE ARCHITECTURE, INC
2907 Shelter Island Drive #105-417
San Diego, CA 92106 619-795-7603 www.insitelandarch.com

DRAWN BY RM/TJ
CHECKED BY TJ

LICENSED LANDSCAPE ARCHITECT — Tim Jachiewski — No. 4947 — 11-30-25 — 12-12-23 — STATE OF CALIFORNIA

APPROVED BY CITY OF PALM DESERT
DATE

CITY OF PALM DESERT, CALIFORNIA
PALMA VILLAGE PARK – SHADE STRUCTURE PROJECT
LANDSCAPE CONSTRUCTION PLAN
PORTION OF N 1/2 OF SEC. 15, T. 5 S., R. 7 E., S.B.M.

SHEET 3 OF 17 SHEETS

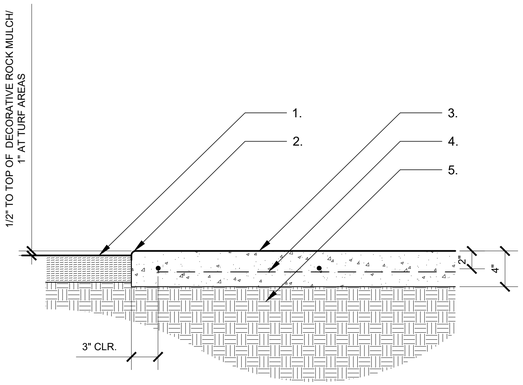

1. PLANTING AREA - TOP OF MULCH 1/2" LOWER THAN CONCRETE FINISH GRADE (OR FLUSH IF STABILIZED D.G.)
2. 1/2" RADIUS
3. CAST-IN-PLACE CONCRETE SLAB, SEE PLANS FOR FINISH AND COLOR
4. #3 REBAR @ 18" O.C. BOTH WAYS, CENTERED IN SLAB
5. SUBGRADE PREPARATION AND COMPACTION PER GEOTECHNICAL ENGINEERING REPORT

CONCRETE PAVEMENT

C-01

PEDESTRIAN APPLICATION

SCALE: 1 1/2" = 1'-0"

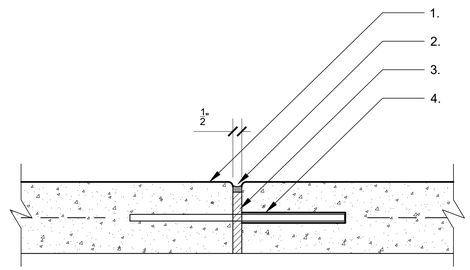

1. CAST-IN-PLACE CONCRETE PAVING, ¼" RADIUS AT JOINT
2. JOINT SEALANT, SIKAFLEX-2C NS TG OR APPROVED EQUAL, COLOR TO MATCH PAVEMENT, INSTALL PER MANUFACTURER'S REQUIREMENTS, APPLY LIGHT SILICA SAND FINISH FOLLOWING INSTALLATION
3. COMPRESSIBLE FELT JOINT FILLER (FULL DEPTH OF PAVEMENT, JOINT SHALL BE STRAIGHT AND TRUE)
4. 12" LONG #3 STEEL DOWELS 24" O.C., SLEEVE OR GREASE ONE END, (OMIT DOWELS AT SITE AND BUILDING WALLS UNLESS REQUIRED BY GEOTECHNICAL ENGINEERING REPORT)

NOTE: IF NEW CONCRETE IS PLACED AGAINST EXISTING CONCRETE, CORE DRILL EXISTING CONCRETE TO SET STEEL DOWELS

EXPANSION JOINT

C-02

IN CONCRETE PAVEMENT

SCALE: 3" = 1'-0"

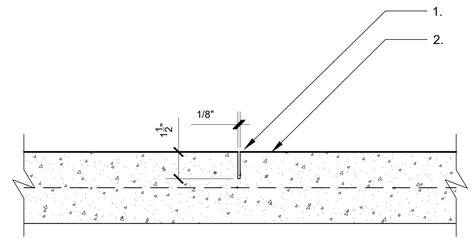

1. SAWCUT SCORE JOINT, STRAIGHT AND TRUE
2. CAST-IN-PLACE CONCRETE PAVING

NOTE: SAWCUTTING SHALL BE COMPLETED AFTER CONCRETE CAN SUPPORT EQUIPMENT FOR A CLEAN CUT, BUT BEFORE SHRINKAGE CRACKING OCCURS

SAWCUT CONTROL JOINT (1/8")

C-03

IN CONCRETE PAVEMENT

SCALE: 3" = 1'-0"

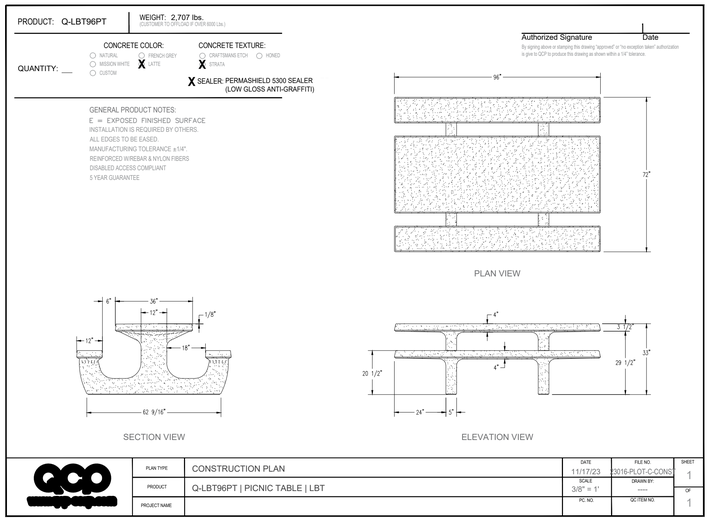

PICNIC TABLE

C-05

STANDARD

SCALE: N.T.S.

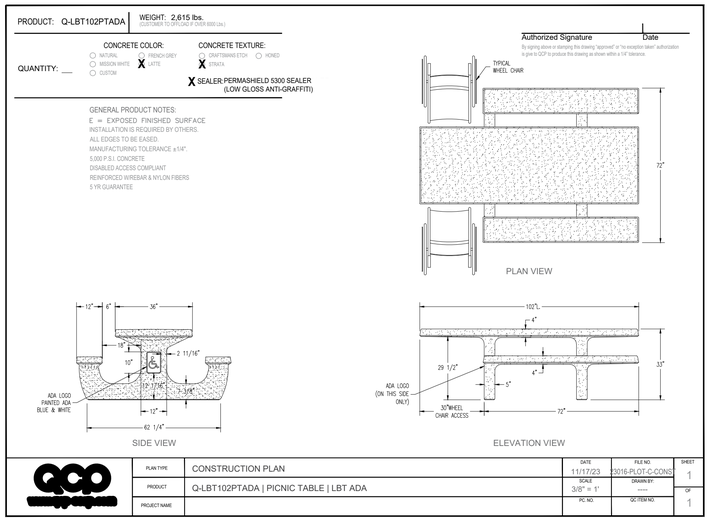

PICNIC TABLE

C-06

A.D.A

SCALE: N.T.S.

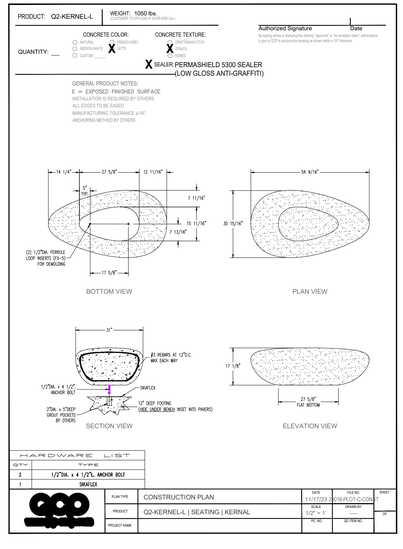

KERNEL BENCH

C-07

SCALE: N.T.S.

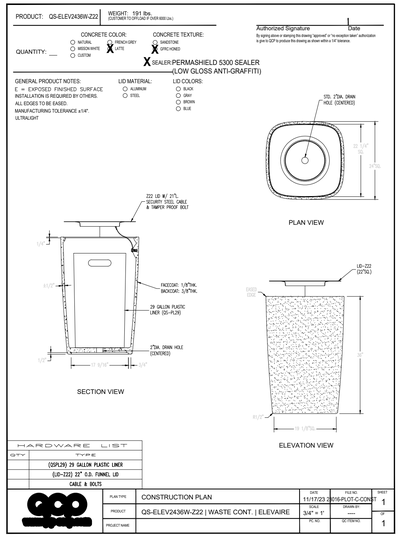

TRASH RECEPTACLE

C-08

SCALE: N.T.S.

DATE: 12-12-23 100% CONSTRUCTION DOCUMENTS

NO.	REVISIONS	APPROVED	DATE

IN-SITE LANDSCAPE ARCHITECTURE, INC.
2907 Shelter Island Drive #105-417
San Diego, CA 92106 619-795-7603 www.insitelandarch.com

DRAWN BY RM/TJ
CHECKED BY TJ

LICENSED LANDSCAPE ARCHITECT — Jim Jachlewski Jr. — REG. 4867 — 11-30-25 — 10-12-23 — STATE OF CALIFORNIA

APPROVED BY CITY OF PALM DESERT

DATE

CITY OF PALM DESERT, CALIFORNIA
PALMA VILLAGE PARK – SHADE STRUCTURE PROJECT
LANDSCAPE CONSTRUCTION DETAILS
PORTION OF N 1/2 OF SEC. 15, T. 5 S., R. 7 E., S.B.M.

SHEET 4 OF 17 SHEETS

GameTime
A PLAYCORE Company

Model Number: 49

Family Size Grill

Enjoy a cookout in the park with this Family Sized Grill! The galvanized 11 gauge fire box, stove bottom and ash pan attach to a steel support post to create a durable, rust resistant base for grilling. The cooking unit pivots 360 degrees to provide proper draft at all times, and the adjustable grates provide 560 square inches of cooking surface for double the cookout fun. Grill available for permanent, in-ground mounting. Includes chained, three position adjustable grates.

Legend
- *Part Reference*
- *Detail Reference*

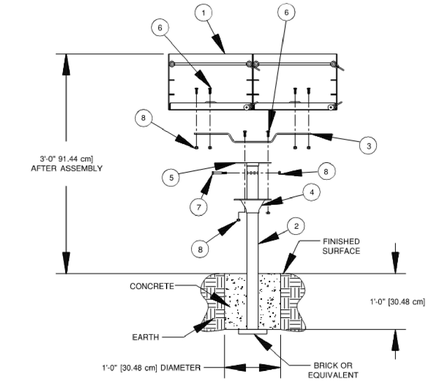

ASSEMBLY DRAWING

Notes:
- *Hole Depths Indicated on All Ground Plans are Measured from the Finished Surface. See Assembly Drawing. All Footing Dimensions are Based on Level Finished Surface.*
- *Suggested Minimum Concrete Rating: 3000 PSI.*
- *Concrete Required: .03 Cubic Yards [.02 Cubic Meters]*

BBQ GRILL

C-09

SCALE: N.T.S.

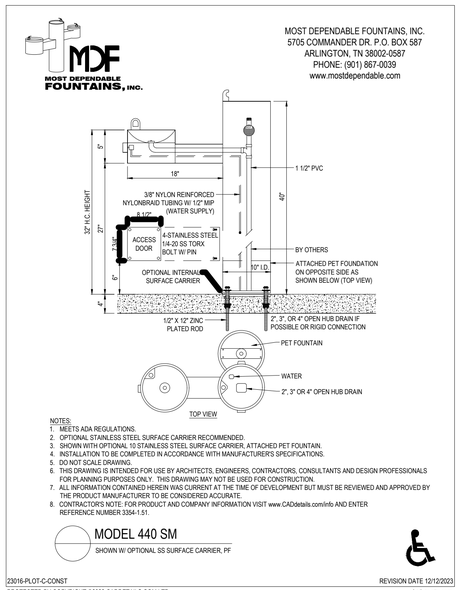

DRINKING FOUNTAIN

C-10

SCALE: N.T.S.

NOTE:
CUT BASE EDGING UP HALFWAY TO FORM CONTINUOUS CORNERS AND COMPACT SOIL ON EACH SIDE OF EDGING TO PREVENT SETTLEMENT.

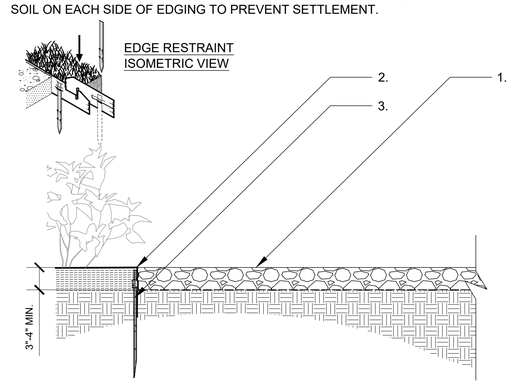

1. DECORATIVE ROCK - SOUTHWEST BOULDER AND STONE "COPPER CANYON CRUSHED ROCK" 1 -4"
2. PERMALOC CLEANLINE 3/16" x 5.5" ALUMINUM LANDSCAPE EDGING (WHEN DECORATIVE ROCK IS ADJACENT TO PLANTING AREA), COLOR: 'BRONZE DURAFLEX', INSTALL WITH STAKES PER MANUFACTURER'S INSTALLATION GUIDELINES. TOP OF EDGING SHALL BE FLUSH WITH FINISH SURFACE OF ROCK
3. 12" STAKE (5) PER 16' SECTION, INSTALL IN PRE-FORMED LOOPS WITHIN EDGING

DECORATIVE ROCK

WITH ALUMINUM EDGE RESTRAINT

C-11

SCALE: 1 1/2" = 1'-0"

NO.	REVISIONS	APPROVED	DATE

IN-SITE LANDSCAPE ARCHITECTURE, INC.
2907 Shelter Island Drive #105-417
San Diego, CA 92106 619-795-7603 www.insitelandarch.com

DRAWN BY RM/TJ
CHECKED BY TJ

LICENSED LANDSCAPE ARCHITECT — Tom Jachimowicz — No. 4847 — 12-12-23 — STATE OF CALIFORNIA

APPROVED BY CITY OF PALM DESERT
DATE

CITY OF PALM DESERT, CALIFORNIA
PALMA VILLAGE PARK – SHADE STRUCTURE PROJECT
LANDSCAPE CONSTRUCTION DETAILS
PORTION OF N 1/2 OF SEC. 15, T. 5 S., R. 7 E., S.B.M.

SHEET 5 OF 17 SHEETS

DATE: 12-12-23 100% CONSTRUCTION DOCUMENTS

2016A

SUPERIOR®
RECREATIONAL PRODUCTS

PROJECT:

LOCATION:

BUILDING TYPE: 6S40-AS

ROOF TYPE: MULTI-RIB

DRAWING LIST:

SHEET NUMBER	DRAWING DESCRIPTION
CS	COVER SHEET
1	ARCHITECTURAL ELEVATIONS
2	STRUCTURAL FRAMING PLAN
3	COLUMN LAYOUT

FABRICATOR APPROVALS:
CITY OF PHOENIX, AZ APPROVED FABRICATOR #C08-2010
CITY OF LOS ANGELES, CA APPROVED FABRICATOR #1598
CITY OF RIVERSIDE, CA APPROVED FABRICATOR #SP06-0033
CITY OF HOUSTON, TX APPROVED FABRICATOR #470
CLARK COUNTY, NV APPROVED FABRICATOR #284
STATE OF UTAH APPROVED FABRICATOR 02008-14

CERTIFICATES:
MIAMI-DADE COUNTY CERTIFICATE OF COMPETENCY NO. 13-0813.16
PCI (POWDER COATING INSTITUTE) 4000 CERTIFIED

MATERIALS:

DESCRIPTION	ASTM DESIGNATION
TUBE STEEL	A500 (GRADE B)
SCHEDULE PIPE	A53 (GRADE B)
RMT PIPE	A519
LIGHT GAGE COLD FORMED	A1003 (GRADE 50)
STRUCTURAL STEEL PLATE	A36
ROOF PANELS (STEEL)	A653

GENERAL NOTES:
UNLESS NOTED OTHERWISE, THIS STRUCTURE WAS DESIGNED TO ONLY SUPPORT WHAT IS SHOWN ON THESE DRAWINGS. SRP MUST BE CONTACTED IF ANYTHING ELSE IS TO BE ATTACHED TO THIS STRUCTURE (WALLS, COLUMN WRAPS, RAILINGS, ETC.) SO THE DESIGN OF THIS STRUCTURE CAN BE REVIEWED AND POSSIBLY REVISED.

UNLESS NOTED OTHERWISE, THIS STRUCTURE WAS DESIGNED ASSUMING A 20' SEPARATION BETWEEN ANY ADJACENT STRUCTURE WITH AN EAVE HEIGHT EQUAL TO OR GREATER THAN THE EAVE HEIGHT OF THIS STRUCTURE. IF THAT SEPARATION DOES NOT EXIST, SRP MUST BE CONTACTED SO THE DESIGN OF THIS STRUCTURE CAN BE REVIEWED AND POSSIBLY REVISED.

STRUCTURAL STEEL SHALL BE DETAILED, FABRICATED, AND ERECTED IN ACCORDANCE WITH THE LATEST EDITION OF THE AMERICAN INSTITUTE OF STEEL CONSTRUCTION (AISC) SPECIFICATION MANUAL.

ALL WELDING IS PERFORMED BY AMERICAN WELDING SOCIETY CERTIFIED WELDERS AND CONFORMS TO THE LATEST EDITION OF AWS D1.1 OR D1.3 AS REQUIRED.

PARTS SHOWN MAY BE UPGRADED DUE TO STANDARDIZED FABRICATION. REFER TO THE SHIPPING BILL OF MATERIALS FOR POSSIBLE SUBSTITUTIONS.

FOR PROPER FIELD INSTALLATION OF THE BUILDING IT IS RECOMMENDED THAT THE PRIMARY FRAME INSTALLER AND THE ROOF INSTALLER HAVE A MINIMUM FIVE (5) YEARS DOCUMENTED EXPERIENCE INSTALLING THIS TYPE OF PRODUCT.

FOR PROPER FIELD INSTALLATION OF THE BUILDING IT IS RECOMMENDED THAT ELECTRIC WIRING, IF REQUIRED, BE RUN THROUGH THE STRUCTURAL MEMBERS BEFORE THE BUILDING IS ERECTED.

STOP!!
NOT FOR CONSTRUCTION
USE FOR PRELIMINARY PLANNING AND ESTIMATING ONLY

DRAWING: COVER SHEET
SCALE: NTS
REV LEVEL: A
SUPERIOR® RECREATIONAL PRODUCTS
(866)341-4364
www.srpshelter.com
A PLAYCORE Company

SUPERIOR RECREATIONAL PRODUCTS 1050 COLUMBIA DR. CARROLLTON, GA 30117
SHEET CS

GENERAL ROOF NOTES:

1. METAL ROOFING:
   - 24 GAUGE
   - GALVALUME COATED
   - KYNAR 500 PAINTED
2. TRIM COLOR MATCHES ROOF
3. SEE SRPSHELTER.COM FOR COLOR OPTIONS

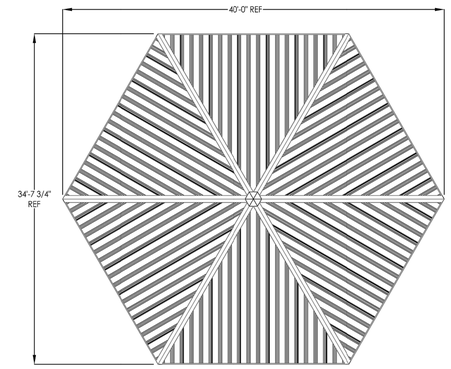

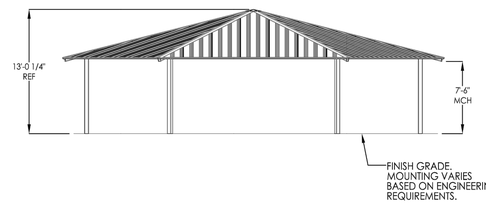

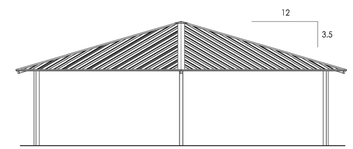

STOP!!
NOT FOR CONSTRUCTION
USE FOR PRELIMINARY PLANNING AND ESTIMATING ONLY

DRAWING: ARCHITECTURAL ELEVATIONS
SCALE: NTS
REV LEVEL: A
SUPERIOR® RECREATIONAL PRODUCTS
(866)341-4364
www.srpshelter.com
A PLAYCORE Company

SUPERIOR RECREATIONAL PRODUCTS 1050 COLUMBIA DR. CARROLLTON, GA 30117
SHEET 1

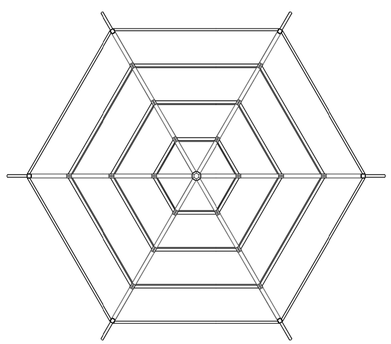

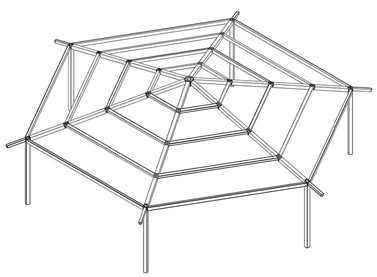

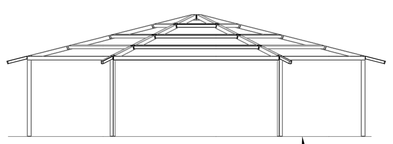

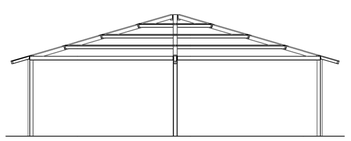

FINISH GRADE. MOUNTING VARIES BASED ON ENGINEERING REQUIREMENTS.

C-12 **SHADE STRUCTURE**
SCALE: N.T.S.

STOP!!
NOT FOR CONSTRUCTION
USE FOR PRELIMINARY PLANNING AND ESTIMATING ONLY

DRAWING: STRUCTURAL FRAMING PLAN
SCALE: NTS
REV LEVEL: A
SUPERIOR® RECREATIONAL PRODUCTS
(866)341-4364
www.srpshelter.com
A PLAYCORE Company

SUPERIOR RECREATIONAL PRODUCTS 1050 COLUMBIA DR. CARROLLTON, GA 30117
SHEET 2

BASEPLATE NOTES:

1. SRP ENGINEERING WILL DETERMINE REQUIRED BASEPLATE DESIGN AFTER ENGINEERING PACKAGE IS ORDERED.
2. CUSTOMER MAY SUGGEST PREFERRED BASEPLATE DESIGN.

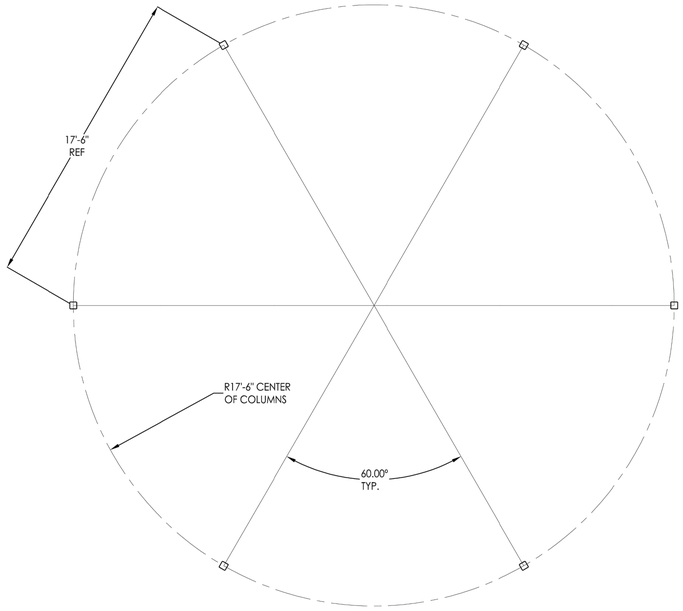

FRAME COLOR: T.B.D

ROOF COLOR: T.B.D

CONTRACTOR SHALL OBTAIN SEALED ENGINEERED SHOP DRAWINGS FROM THE MANUFACTURER FOR PERMIT AND CONSTRUCTION.

STOP!!
NOT FOR CONSTRUCTION
USE FOR PRELIMINARY PLANNING AND ESTIMATING ONLY

DRAWING: COLUMN LAYOUT
SCALE: NTS
REV LEVEL: A
SUPERIOR® RECREATIONAL PRODUCTS
(866)341-4364
www.srpshelter.com
A PLAYCORE Company

SUPERIOR RECREATIONAL PRODUCTS 1050 COLUMBIA DR. CARROLLTON, GA 30117
SHEET 3

DATE: 12-12-23 100% CONSTRUCTION DOCUMENTS

NO.	REVISIONS	APPROVED	DATE

IN-SITE LANDSCAPE ARCHITECTURE, INC.
2907 Shelter Island Drive #105-417
San Diego, CA 92106 619-795-7603 www.insitelandarch.com

DRAWN BY RM/TJ
CHECKED BY TJ

LICENSED LANDSCAPE ARCHITECT
Timothy Jachlewski
No. 4367
11-30-23
12-12-23
STATE OF CALIFORNIA

APPROVED BY CITY OF PALM DESERT
DATE

CITY OF PALM DESERT, CALIFORNIA
PALMA VILLAGE PARK – SHADE STRUCTURE PROJECT
LANDSCAPE CONSTRUCTION DETAILS
PORTION OF N 1/2 OF SEC. 15, T. 5 S., R. 7 E., S.B.M.

SHEET 6 OF 17 SHEETS

CONTRACTOR SHALL OBTAIN SEALED ENGINEERED SHOP DRAWINGS FROM THE MANUFACTURER FOR PERMIT AND CONSTRUCTION

ENGINEERING WILL DETERMINE THE REQUIRED ANCHOR BOLT LAYOUT WHEN DESIGNING THIS STRUCTURE

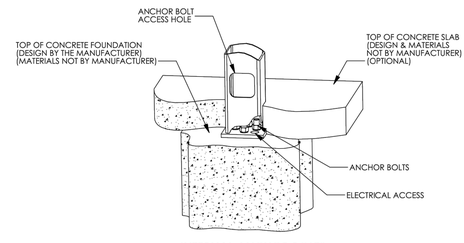

INTERNAL ANCHOR BOLTS
(BELOW FINISH GRADE)

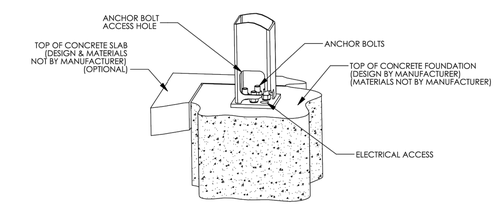

INTERNAL ANCHOR BOLTS
(AT FINISH GRADE)

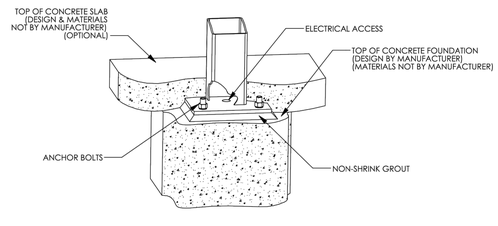

EXTERNAL ANCHOR BOLTS
(BELOW FINISH GRADE)

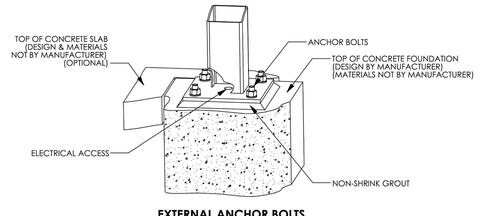

EXTERNAL ANCHOR BOLTS
(AT FINISH GRADE)

NOTES:
1. THE REQUIRED ANCHOR BOLT LAYOUT IS A FUNCTION OF THE PROJECT SPECIFIC ENGINEERING REQUIREMENTS.
2. ENGINEERING WILL DETERMINE THE REQUIRED ANCHOR BOLT LAYOUT BECAUSE IT CAN DRAMATICALLY AFFECT THE STRUCTURE'S DESIGN AND PERFORMANCE.
3. THE ANCHOR BOLT LAYOUT CAN IMPACT THE CONSTRUCTION SEQUENCE (I.E. THE TIMING OF THE SLAB INSTALLATION). SO PLEASE USE THE FOLLOWING INFORMATION AS A GENERAL GUIDE:
   - INTERNAL ANCHOR BOLTS ARE PROVIDED ON THE VAST MAJORITY OF STRUCTURES.
   - EXTERNAL ANCHOR BOLTS ARE TYPICALLY ONLY REQUIRED IN HIGH SEISMIC REGIONS, ON SOME LARGE STRUCTURES (> 2000 SQ FT), AND ON CANTILEVERED STRUCTURES.
4. IF YOUR PROJECT HAS UNIQUE BASE PLATE, SLAB, OR FOUNDATION REQUIREMENTS, PLEASE COMMUNICATE THAT INFORMATION WHEN PLACING AN ENGINEERING ORDER.

STOP!!
NOT FOR CONSTRUCTION

USE FOR PRELIMINARY PLANNING AND ESTIMATING ONLY

(614)399-1943
www.polygon.com
polygon by PORTERCORP
COPYRIGHT 2014
THESE DRAWINGS REMAIN THE PROPERTY OF PORTER, INC. DUBLIN, OH. 43017

PROJECT:
PROJECT LOCATION:
DRAWING: ANCHOR BOLT LAYOUT
CREATION DATE:
BUILDING NO:
CAD MODEL: FOUNDATION
DRAWN BY:
REV LEVEL: A
PRINT DATE: 11/5/2019
SCALE: 1:1
SHEET: P

C-12 **SHADE STRUCTURE**
SCALE: N.T.S.

NO.	REVISIONS	APPROVED	DATE

IN-SITE LANDSCAPE ARCHITECTURE, INC.
2907 Shelter Island Drive #105-417
San Diego, CA 92106 619-795-7603 www.insitelandarch.com

DRAWN BY RM/TJ
CHECKED BY TJ

LICENSED LANDSCAPE ARCHITECT — Tim Jachlewski — No. 4847 — Exp. 11-30-25 — 12-12-23 — STATE OF CALIFORNIA

APPROVED BY CITY OF PALM DESERT
DATE

CITY OF PALM DESERT, CALIFORNIA
PALMA VILLAGE PARK – SHADE STRUCTURE PROJECT
LANDSCAPE CONSTRUCTION DETAILS
PORTION OF N 1/2 OF SEC. 15, T. 5 S., R. 7 E., S.B.M.

SHEET 7 OF 17 SHEETS

DATE: 12-12-23 100% CONSTRUCTION DOCUMENTS

SECTION 321313 - CONCRETE PAVING

PART 1 - GENERAL

1.01 RELATED DOCUMENT
- A. Drawings and general provisions of the Contract, including General and Supplementary Conditions and Division 01 Specification Sections, apply to this Section

1.02 SUMMARY
- A. Section Includes:
  1. Concrete pavement - pedestrian applications
  2. Concrete pavement -vehicular applications
- B. Related Sections
  1. Division 03 Section "Cast-in-Place Concrete" for general construction applications of concrete.

1.03 DEFINITIONS
- A. Cementitious Materials: Portland cement alone or in combination with one or more of blended hydraulic cement, fly ash and other pozzolans, and ground granulated blast-furnace slag.

1.04 SUBMITTALS
- A. Product Data: For each type of product indicated in PDF format.
- B. Other Action Submittals:
  1. Design Mixtures: For each concrete paving mixture. Include alternate design mixtures when characteristics of materials, Project conditions, weather, test results, or other circumstances warrant adjustments in PDF format
- C. Qualification Data: For qualified ready-mix concrete manufacturer and testing agency in PDF format.
- D. Material Certificates: For the following, from manufacturer in PDF format:
  1. Cementitious materials.
  2. Steel reinforcement and reinforcement accessories.
  3. Fiber reinforcement.
  4. Admixtures.
  5. Curing compounds.
  6. Applied finish materials.
  7. Bonding agent or epoxy adhesive.
  8. Joint fillers.
- E. Material Test Reports: For each of the following in PDF format
  1. Aggregates.
- F. Field quality-control reports in PDF format.

1.05 QUALITY ASSURANCE
- A. Ready-Mix-Concrete Manufacturer Qualifications: A firm experienced in manufacturing ready-mixed concrete products and that complies with ASTM C 94/C 94M requirements for production facilities and equipment.
  1. Manufacturer certified according to NRMCA's "Certification of Ready Mixed Concrete Production Facilities" (Quality Control Manual - Section 3, "Plant Certification Checklist").
- B. Testing Agency Qualifications: Qualified according to ASTM C 1077 and ASTM E 329 for testing indicated.
  1. Personnel conducting field tests shall be qualified as ACI Concrete Field Testing Technician, Grade 1, according to ACI CP-1 or an equivalent certification program.
- C. Concrete Testing Service: Engage a qualified testing agency to perform material evaluation tests and to design concrete mixtures.
- D. ACI Publications: Comply with ACI 301 (ACI 301M) unless otherwise indicated.
- E. Mockups:
  1. Build mockups of full-thickness sections of concrete paving to demonstrate typical joints; surface finish, texture, and color; curing; and standard of workmanship.
  2. Build mockups of concrete paving in the location and of the size indicated or, if not indicated, build mockups where directed by Landscape Architect and not less than 48 inches (1200 mm) by 48 inches (1200 mm).
  3. Approval of mockups does not constitute approval of deviations from the Contract Documents contained in mockups unless Landscape Architect specifically approves such deviations in writing.
  4. Approved mockups may become part of the completed Work if undisturbed at time of Substantial Completion.
- F. Pre-installation Conference: Conduct conference at Project site.
  1. Review methods and procedures related to concrete paving, including but not limited to, the following:
     - a. Concrete mixture design.
     - b. Quality control of concrete materials and concrete paving construction practices.
  2. Require representatives of each entity directly concerned with concrete paving to attend, including the following:
     - a. Contractor's superintendent.
     - b. Concrete paving subcontractor.

1.06 PROJECT CONDITIONS
- A. Traffic Control: Maintain access for vehicular and pedestrian traffic as required for other construction activities.

1.07 REFERENCES
- A. Geotechnical Report: A Geotechnical Report has been prepared for this project and is available for the Contractor's review. The Contractor is required to review the findings and recommendations prior to beginning any work on the project.

PART 2 - PRODUCTS

2.01 FORMS
- A. Form Materials: Plywood, metal, metal-framed plywood, or other approved panel-type materials to provide full-depth, continuous, straight, and smooth exposed surfaces.
  1. Use flexible or uniformly curved forms for curves with a radius of 100 feet (30.5 m) or less. Do not use bent forms.
- B. Form-Release Agent: Commercially formulated form-release agent that will not bond with, stain, or adversely affect concrete surfaces and that will not impair subsequent treatments of concrete surfaces.

2.02 STEEL REINFORCEMENT
- A. Recycled Content: Provide steel reinforcement with an average recycled content of steel so postconsumer recycled content plus one-half of preconsumer recycled content is not less than 25 percent.
- B. Reinforcing Bars: ASTM A 615/A 615M, Grade 60 (Grade 420); deformed.
- C. Joint Dowel Bars: ASTM A 615/A 615M, Grade 60 (Grade 420) plain-steel bars (galvanized) after fabrication according to ASTM A 767/A 767M, Class I coating. Cut bars true to length with ends square and free of burrs.
- D. Hook Bolts: ASTM A 307, Grade A (ASTM F 568M, Property Class 4.6), internally and externally threaded. Design hook-bolt joint assembly to hold coupling against paving form and in position during concreting operations, and to permit removal without damage to concrete or hook bolt.
- E. Bar Supports: Bolsters, chairs, spacers, and other devices for spacing, supporting, and fastening reinforcing bars, welded wire reinforcement, and dowels in place. Manufacture bar supports according to CRSI's "Manual of Standard Practice" from steel wire, plastic, or precast concrete of greater compressive strength than concrete specified, and as follows:
  1. Equip wire bar supports with sand plates or horizontal runners where base material will not support chair legs.
  2. For epoxy-coated reinforcement, use epoxy-coated or other dielectric-polymer-coated wire bar supports.
- F. Epoxy Repair Coating: Liquid, two-part, epoxy repair coating, compatible with epoxy coating on reinforcement.
- G. Zinc Repair Material: ASTM A 780.

2.03 CONCRETE MATERIALS
- A. Cementitious Material: Use the following cementitious materials, of same type, brand, and source throughout Project:
  1. Portland Cement: ASTM C 150, gray Portland cement Type per geotechnical engineering report.
- B. Normal-Weight Aggregates: ASTM C 33, uniformly graded. Provide aggregates from a single source.
  1. Maximum Coarse-Aggregate Size: ¾ inch (19 mm) nominal.
  2. Fine Aggregate: Free of materials with deleterious reactivity to alkali in cement.
- C. Water: Potable and complying with ASTM C 94/C 94M.
- D. Air-Entraining Admixture: ASTM C 260.
- E. Chemical Admixtures: Admixtures certified by manufacturer to be compatible with other admixtures and to contain not more than 0.1 percent water-soluble chloride ions by mass of cementitious material.
  1. Water-Reducing Admixture: ASTM C 494/C 494M, Type A.
  2. Retarding Admixture: ASTM C 494/C 494M, Type B.
  3. Water-Reducing and Retarding Admixture: ASTM C 494/C 494M, Type D.
  4. High-Range, Water-Reducing Admixture: ASTM C 494/C 494M, Type F.
  5. High-Range, Water-Reducing and Retarding Admixture: ASTM C 494/C 494M, Type G.
  6. Plasticizing and Retarding Admixture: ASTM C 1017/C 1017M, Type II.
- F. Color Admixture (Integral): ASTM C 979, synthetic mineral-oxide pigments or colored water-reducing admixtures; color stable, nonfading, and resistant to lime and other alkalis.
  1. Manufacturers: Subject to compliance with requirements, available manufacturers offering products that may be incorporated into the Work include, but are not limited to, the following:
     - a. Davis Colors.
     - b. Scofield Colors
     - c. Approved equal
  2. Color: As indicated on drawings.
  3. Curing and Sealer: Davis Colors - W-1000 Clear Cure and Seal or approved equal.
- G. Color Hardener (Dry Shake): ASTM C 979, synthetic mineral-oxide pigments or colored powdered, cementitious material; color stable, nonfading, and resistant to lime and other alkalis.
  1. Manufacturers: Subject to compliance with requirements, available manufacturers offering products that may be incorporated into the Work include, but are not limited to, the following:
     - a. Scofield Colors
     - b. Approved equal
  2. Color: As indicated on drawings.
  3. Curing and Sealer: L.M. Scofield - Cureseal-S (Matte) or approved equal.
- H. Sealer for Natural Gray Concrete:
  1. Manufacturer: Glaze N Seal Penetrating Sealer Multi-Purpose or approved equal (no gloss, non-slip finish).
- I. Sealer for Seeded Aggregate Concrete:
  1. Manufacturer: Glaze N Seal Penetrating Sealer Multi-Purpose or approved equal (no gloss, non-slip finish).
- J. Surface Retarder:
  1. Water based, top-surface retarder for concrete paving. Retarder provides varying grades of etching from acid etch to heavy/deep etch. Manufacturer: Grace Top-Cast or approved equal.

2.04 CURING MATERIALS
- A. Natural gray concrete shall be cured with a liquid curing compound complying with the requirements of ASTM C 309. The curing compound shall be Type 1-D and applied in accordance with the manufacturer's requirements.
- B. Colored concrete shall be cured with a liquid curing compound complying with the requirements of ASTM C 309. The curing compound shall be applied in accordance with the approved concrete color manufacturer's requirements.

2.05 RELATED MATERIALS
- A. Expansion Joint Fillers: ASTM D 1751, asphalt-saturated cellulosic fiber in preformed strips.
- B. Polyurethane Elastomeric Sealant: Two-component, traffic grade expansion joint sealant meeting ASTM C 920. Sealant shall be Sikaflex - 2c NS TG or approved equal. Color to match adjacent paving. Install per manufacturer's requirements and plan detail.
- C. Concrete Doweling System: 100 percent recycled polypropolene, compressibility ASTM D 695. Doweling system shall be "Speed Dowel" by Greenstreak Group, Inc. or approved equal. Install per manufacturer's requirements.
- D. Micro-Reinforcement Fibers: Micro-Reinforcement Fibers are required in the concrete mix. Manufacturer: SI Concrete Systems, Fibermesh 150 or approved equal. Application rate per manufacturer's requirements.

2.06 CONCRETE MIXTURES
- A. Prepare design mixtures, proportioned according to ACI 301 (ACI 301M), for each type and strength of normal-weight concrete, and as determined by either laboratory trial mixtures or field experience.
  1. Use a qualified independent testing agency for preparing and reporting proposed concrete design mixtures for the trial batch method.
  2. When automatic machine placement is used, determine design mixtures and obtain laboratory test results that meet or exceed requirements.
- B. Proportion mixtures to provide normal-weight concrete with the following properties:
  1. Compressive Strength (28 Days): 3000 psi (20.7 MPa).
  2. Maximum Water-Cementitious Materials Ratio at Point of Placement: per Geotechnical Engineering Report.
  3. Slump Limit: 4 inches (100 mm), plus or minus 1 inch (25 mm).
- C. Add air-entraining admixture at manufacturer's prescribed rate to result in normal-weight concrete at point of placement.
- D. Chemical Admixtures: Use admixtures according to manufacturer's written instructions. Retain both subparagraphs below if required; revise to suit Project.
  1. Use in concrete as required for placement and workability.
  2. Use water-reducing and retarding admixture when required by high temperatures, low humidity, or other adverse placement conditions.
- E. Cementitious Materials: Limit percentage by weight of cementitious materials other than portland cement according to ACI 301 (ACI 301M) requirements as follows:
  1. Fly Ash or Pozzolan: 25 percent.
  2. Ground Granulated Blast-Furnace Slag: 50 percent.
  3. Combined Fly Ash or Pozzolan, and Ground Granulated Blast-Furnace Slag: 50 percent, with fly ash or pozzolan not exceeding 25 percent.
- F. Color Admixture: Add color admixture to concrete mixture according to manufacturer's written instructions and to result in hardened concrete color consistent with approved mockup.

2.07 CONCRETE MIXING
- A. Ready-Mixed Concrete: Measure, batch, and mix concrete materials and concrete according to ASTM C 94/C 94M. Furnish batch certificates for each batch discharged and used in the Work.
  1. When air temperature is between 85 and 90 deg F (30 and 32 deg C), reduce mixing and delivery time from 1-1/2 hours to 75 minutes; when air temperature is above 90 deg F (32 deg C), reduce mixing and delivery time to 60 minutes.
- B. Project-Site Mixing: Measure, batch, and mix concrete materials and concrete according to ASTM C 94/C 94M. Mix concrete materials in appropriate drum-type batch machine mixer.
  1. For concrete batches of 1 cu. Yd. (0.76 cu. M) or smaller, continue mixing at least 1-1/2 minutes, but not more than 5 minutes after ingredients are in mixer, before any part of batch is released.
  2. For concrete batches larger than 1 cu. Yd. (0.76 cu. M), increase mixing time by 15 seconds for each additional 1 cu. Yd. (0.76 cu. M).
  3. Provide batch ticket for each batch discharged and used in the Work, indicating Project identification name and number, date, mixture type, mixing time, quantity, and amount of water added.

PART 3 - EXECUTION

3.01 EXAMINATION
- A. Examine exposed subgrades and subbase surfaces for compliance with requirements for dimensional, grading, and elevation tolerances.
- B. Proof-roll prepared subbase surface below concrete paving to identify soft pockets and areas of excess yielding.
  1. Completely proof-roll subbase in one direction and repeat in perpendicular direction. Limit vehicle speed to 3 mph (5 km/h).
  2. Proof-roll with a pneumatic-tired and loaded, 10-wheel, tandem-axle dump truck weighing not less than 15 tons (13.6 tonnes).
  3. Correct subbase with soft spots and areas of pumping or rutting exceeding depth of ½ inch (13 mm) according to requirements in Division 31 Section "Earth Moving."
- C. Proceed with installation only after unsatisfactory conditions have been corrected.

3.02 PREPARATION
- A. Remove loose material from compacted subbase surface immediately before placing concrete.

3.03 EDGE FORMS AND SCREED CONSTRUCTION
- A. Set, brace, and secure edge forms, bulkheads, and intermediate screed guides to required lines, grades, and elevations. Install forms to allow continuous progress of work and so forms can remain in place at least 24 hours after concrete placement.
- B. Clean forms after each use and coat with form-release agent to ensure separation from concrete without damage.

3.04 STEEL REINFORCEMENT
- A. General: Comply with CRSI's "Manual of Standard Practice" for fabricating, placing, and supporting reinforcement.
- B. Clean reinforcement of loose rust and mill scale, earth, ice, or other bond-reducing materials.
- C. Arrange, space, and securely tie bars and bar supports to hold reinforcement in position during concrete placement. Maintain minimum cover to reinforcement.
- D. Zinc-Coated Reinforcement: Use galvanized-steel wire ties to fasten zinc-coated reinforcement. Repair cut and damaged zinc coatings with zinc repair material.
- E. Epoxy-Coated Reinforcement: Use epoxy-coated steel wire ties to fasten epoxy-coated reinforcement. Repair cut and damaged epoxy coatings with epoxy repair coating according to ASTM D 3963/D 3963M.
- F. Install fabricated bar mats in lengths as long as practicable. Handle units to keep them flat and free of distortions. Straighten bends, kinks, and other irregularities, or replace units as required before placement. Set mats for a minimum 2-inch (50-mm) overlap of adjacent mats.

3.05 JOINTS
- A. General: Form construction, expansion, and control joints and tool edges true to line, with faces perpendicular to surface plane of concrete. Construct transverse joints at right angles to centerline unless otherwise indicated.
  1. When joining existing paving, place transverse joints to align with previously placed joints unless otherwise indicated.
- B. Construction Joints: Set construction joints at side and end terminations of paving and at locations where paving operations are stopped for more than one-half hour unless paving terminates at isolation joints.
  1. Continue steel reinforcement across construction joints unless otherwise indicated. Do not continue reinforcement through sides of paving strips unless otherwise indicated.
  2. Provide tie bars at sides of paving strips where indicated.
  3. Butt Joints: Use bonding agent at joint locations where fresh concrete is placed against hardened or partially hardened concrete surfaces.
  4. Keyed Joints: Provide preformed keyway-section forms or bulkhead forms with keys unless otherwise indicated. Embed keys at least 1-1/2 inches (38 mm) into concrete.
  5. Doweled Joints: Install dowel bars and support assemblies at joints where indicated. Lubricate or coat with asphalt one-half of dowel length to prevent concrete bonding to one side of joint.
- C. Expansion Joints: Form expansion joints of preformed joint-filler strips and sealant abutting concrete curbs, catch basins, manholes, inlets, structures, other fixed objects, and where indicated on the drawings.
  1. Locate expansion joints at intervals as indicated on drawings.
  2. Extend joint fillers full width and depth of joint.
  3. Terminate joint filler not less than ½ inch (13 mm) or more than 1 inch (25 mm) below finished surface if joint sealant is indicated.
  4. Place top of joint filler flush with finished concrete surface if joint sealant is not indicated.
  5. Furnish joint fillers in one-piece lengths. Where more than one length is required, lace or clip joint-filler sections together.
  6. During concrete placement, protect top edge of joint filler with metal, plastic, or other temporary preformed cap. Remove protective cap after concrete has been placed on both sides of joint.
- D. Control Joints: Form weakened-plane contraction control joints, sectioning concrete into areas as indicated. Construct contraction control joints for a depth equal to at least one-fourth of the concrete thickness, as follows:
  1. Sawed Joints: Form contraction joints with power saws equipped with shatterproof abrasive or diamond-rimmed blades. Cut 1/8-inch- (3-mm-) wide joints into concrete when cutting action will not tear, abrade, or otherwise damage surface and before developing random contraction cracks.
     - a. Tolerance: Ensure that sawed joints are within 3 inches (75 mm) either way from centers of dowels.
  2. Doweled Contraction Joints: Install dowel bars and support assemblies at joints where indicated. Lubricate or coat with asphalt one-half of dowel length to prevent concrete bonding to one side of joint.
- E. Edging: After initial floating, tool edges of paving, gutters, curbs, and joints in concrete with an edging tool to a radius as indicated on the drawings. Repeat tooling of edges after applying surface finishes. Eliminate edging-tool marks on concrete surfaces.

3.06 CONCRETE PLACEMENT
- A. Before placing concrete, inspect and complete formwork installation, steel reinforcement, and items to be embedded or cast-in.
- B. Remove snow, ice, or frost from subbase surface and steel reinforcement before placing concrete. Do not place concrete on frozen surfaces.
- C. Moisten subbase to provide a uniform dampened condition at time concrete is placed. Do not place concrete around manholes or other structures until they are at required finish elevation and alignment.
- D. Comply with ACI 301 (ACI 301M) requirements for measuring, mixing, transporting, and placing concrete.
- E. Do not add water to concrete during delivery or at Project site. Do not add water to fresh concrete after testing.
- F. Deposit and spread concrete in a continuous operation between transverse joints. Do not push or drag concrete into place or use vibrators to move concrete into place.
- G. Consolidate concrete according to ACI 301 (ACI 301M) by mechanical vibrating equipment supplemented by hand spading, rodding, or tamping.
  1. Consolidate concrete along face of forms and adjacent to transverse joints with an internal vibrator. Keep vibrator away from joint assemblies, reinforcement, or side forms. Use only square-faced shovels for hand spreading and consolidation. Consolidate with care to prevent dislocating reinforcement, dowels, and joint devices.
- H. Screed paving surface with a straightedge and strike off.
- I. Commence initial floating using bull floats or darbies to impart an open-textured and uniform surface plane before excess moisture or bleed water appears on the surface. Do not further disturb concrete surfaces before beginning finishing operations or spreading surface treatments.
- J. Curbs and Gutters: Use design mixture for automatic machine placement. Produce curbs and gutters to required cross section, lines, grades, finish, and jointing.
- K. Slip-Form Paving: Use design mixture for automatic machine placement. Produce paving to required thickness, lines, grades, finish, and jointing.
  1. Compact subbase and prepare subgrade of sufficient width to prevent displacement of slip-form paving machine during operations.
- L. Cold-Weather Placement: Protect concrete work from physical damage or reduced strength that could be caused by frost, freezing, or low temperatures. Comply with ACI 306.1 and the following:
  1. When air temperature has fallen to or is expected to fall below 40 deg F (4.4 deg C), uniformly heat water and aggregates before mixing to obtain a concrete mixture temperature of not less than 50 deg F (10 deg C) and not more than 80 deg F (27 deg C) at point of placement.
  2. Do not use frozen materials or materials containing ice or snow.
  3. Do not use calcium chloride, salt, or other materials containing antifreeze agents or chemical accelerators unless otherwise specified and approved in design mixtures.
- M. Hot-Weather Placement: Comply with ACI 301 (ACI 301M) and as follows when hot-weather conditions exist:
  1. Cool ingredients before mixing to maintain concrete temperature below 90 deg F (32 deg C) at time of placement. Chilled mixing water or chopped ice may be used to control temperature, provided water equivalent of ice is calculated in total amount of mixing water. Using liquid nitrogen to cool concrete is Contractor's option.
  2. Cover steel reinforcement with water-soaked burlap so steel temperature will not exceed ambient air temperature immediately before embedding in concrete.
  3. Fog-spray forms, steel reinforcement, and subgrade just before placing concrete. Keep subgrade moisture uniform without standing water, soft spots, or dry areas.

3.07 SPECIAL FINISHES
- A. Medium Broom Finish in paving surface as follows:
  1. Uniformly broom finish the concrete perpendicular to the direction of travel to create a uniform broom texture.
  2. Provide a 4'x4' mock-up of color and finish for approval prior to installation.
- B. Heavy Broom Finish in paving surface as follows:
  1. Uniformly broom finish the concrete perpendicular to the direction of travel to create a uniform broom texture.
  2. Provide a 4'x4' mock-up of color and finish for approval prior to installation.
- C. Seeded Aggregate Finish in paving surface as follows:
  1. Stones for the surface of the paving shall be hand seeded so as to produce an even coverage of stones.
  2. Provide a 4'x4' mock-up of color and finish for approval prior to installation.
- D. Retarder Finish in paving surface as follows:
  1. Uniformly remove the cement film to a sand surface level according to manufacturer's instructions.
  2. Finish surface should resemble a natural sandstone surface.
  3. Provide a 4'x4' mock-up of color and finish for approval prior to installation.
- E. Exposed Aggregate Finish in paving surface as follows:
  1. Uniformly remove the cement film to the aggregate surface level.
  2. Provide a 4'x4' mock-up of color and finish for approval prior to installation.
- F. Light Sandblast Finish in paving surface as follows:
  1. After concrete is allowed to harden to a uniform hardness, lightly sandblast to uniformly remove the cement film to a sand surface level.
  2. Finish surface should resemble a natural sandstone surface.
  3. Provide a 4'x4' mock-up of color and finish for approval prior to installation.
- G. Heavy Sandblast Finish in paving surface as follows:
  1. After concrete is allowed to harden to a uniform hardness, heavily sandblast to uniformly remove the cement film to uniformly reveal some of the aggregate.
  2. Provide a 4'x4' mock-up of color and finish for approval prior to installation.

3.08 CONCRETE PROTECTION AND CURING
- A. General: Protect freshly placed concrete from premature drying and excessive cold or hot temperatures.
- B. Comply with ACI 306.1 for cold-weather protection.
- C. Evaporation Retarder: Apply evaporation retarder to concrete surfaces if hot, dry, or windy conditions cause moisture loss approaching 0.2 lb/sq. ft. x h (1 kg/sq. m x h) before and during finishing operations. Apply according to manufacturer's written instructions after placing, screeding, and bull floating or darbying concrete but before float finishing.
- D. Begin curing after finishing concrete but not before free water has disappeared from concrete surface.
- E. Curing Methods: Cure concrete by moisture curing, moisture-retaining-cover curing, curing compound or a combination of these as follows:
  1. Moisture Curing: Keep surfaces continuously moist for not less than seven days with the following materials:
     - a. Water.
     - b. Continuous water-fog spray.
     - c. Absorptive cover, water saturated and kept continuously wet. Cover concrete surfaces and edges with 12-inch (300-mm) lap over adjacent absorptive covers.
  2. Curing Compound: Apply uniformly in continuous operation by power spray or roller according to manufacturer's written instructions. Recoat areas that have been subjected to heavy rainfall within three hours after initial application. Maintain continuity of coating, and repair damage during curing period.

3.09 PAVING TOLERANCES
- A. Comply with tolerances in ACI 117 and as follows:
  ACI 117 establishes few paving tolerances; those in subparagraphs below are based on ACI 330.1. Revise to suit Project.
  1. Elevation: 1/4 inch (6.35 mm).
  2. Thickness: Plus 3/8 inch (10 mm), minus 1/4 inch (6 mm).
  3. Surface: Gap below 10-foot- (3-m-) long, unleveled straightedge not to exceed 1/2 inch (13 mm).
  4. Alignment of Tie-Bar End Relative to Line Perpendicular to Paving Edge: 1/2 inch per 12 inches (13 mm per 300 mm) of tie bar.
  5. Lateral Alignment and Spacing of Dowels: 1 inch (25 mm).
  6. Vertical Alignment of Dowels: 1/4 inch (6 mm).
  7. Alignment of Dowel-Bar End Relative to Line Perpendicular to Paving Edge: 1/4 inch per 12 inches (6 mm per 300 mm) of dowel.
  8. Joint Spacing: 3 inches (75 mm).
  9. Contraction Joint Depth: Plus 1/4 inch (6 mm), no minus.
  10. Joint Width: Plus 1/8 inch (3 mm), no minus.

3.10 FIELD QUALITY CONTROL
- A. Testing Agency: Engage a qualified testing agency to perform tests and inspections.
- B. Testing Services: Testing of composite samples of fresh concrete obtained according to ASTM C 172 shall be performed according to the following requirements:
  Revise frequency of testing in first subparagraph below to suit Project. First option is based on ACI 301 (ACI 301M), second on ACI 318 (ACI 318M) for slabs.
  1. Testing Frequency: Obtain at least one composite sample for each 5000 sq. ft. (465 sq. m) or fraction thereof of each concrete mixture placed each day.
     - a. When frequency of testing will provide fewer than five compressive-strength tests for each concrete mixture, testing shall be conducted from at least five randomly selected batches or from each batch if fewer than five are used.
  2. Slump: ASTM C 143/C 143M; one test at point of placement for each composite sample, but not less than one test for each day's pour of each concrete mixture. Perform additional tests when concrete consistency appears to change.
  3. Air Content: ASTM C 231, pressure method; one test for each composite sample, but not less than one test for each day's pour of each concrete mixture.
  4. Concrete Temperature: ASTM C 1064/C 1064M; one test hourly when air temperature is 40 deg F (4.4 deg C) and below and when it is 80 deg F (27 deg C) and above, and one test for each composite sample.
  5. Compression Test Specimens: ASTM C 31/C 31M; cast and laboratory cure one set of three standard cylinder specimens for each composite sample.
  6. Compressive-Strength Tests: ASTM C 39/C 39M; test one specimen at seven days and two specimens at 28 days.
     - a. A compressive-strength test shall be the average compressive strength from two specimens obtained from same composite sample and tested at 28 days.
- C. Strength of each concrete mixture will be satisfactory if average of any three consecutive compressive-strength tests equals or exceeds specified compressive strength and no compressive-strength test value falls below specified compressive strength by more than 500 psi (3.4 MPa).
- D. Test results shall be reported in writing to Landscape Architect, concrete manufacturer, and Contractor within 48 hours of testing. Reports of compressive-strength tests shall contain Project identification name and number, date of concrete placement, name of concrete testing and inspecting agency, location of concrete batch in Work, design compressive strength at 28 days, concrete mixture proportions and materials, compressive breaking strength, and type of break for both 7- and 28-day tests.
- E. Nondestructive Testing: Impact hammer, sonoscope, or other nondestructive device may be permitted by Landscape Architect but will not be used as sole basis for approval or rejection of concrete.
- F. Additional Tests: Testing and inspecting agency shall make additional tests of concrete when test results indicate that slump, air entrainment, compressive strengths, or other requirements have not been met, as directed by Landscape Architect.
- G. Concrete paving will be considered defective if it does not pass tests and inspections.
- H. Additional testing and inspecting, at Contractor's expense, will be performed to determine compliance of replaced or additional work with specified requirements.
- I. Prepare test and inspection reports.

3.11 REPAIRS AND PROTECTION
- A. Remove and replace concrete paving that is broken, damaged, or defective or that does not comply with requirements in this Section. Remove work in complete sections from joint to joint unless otherwise approved by Landscape Architect.
- B. Drill test cores, where directed by Landscape Architect, when necessary to determine magnitude of cracks or defective areas. Fill drilled core holes in satisfactory paving areas with portland cement concrete bonded to paving with epoxy adhesive.
- C. Protect concrete paving from damage. Exclude traffic from paving for at least 14 days after placement. When construction traffic is permitted, maintain paving as clean as possible by removing surface stains and spillage of materials as they occur.
- D. Maintain concrete paving free of stains, discoloration, dirt, and other foreign material. Sweep paving not more than two days before date scheduled for Substantial Completion inspections.

END OF SECTION 321313

DATE: 12-12-23 100% CONSTRUCTION DOCUMENTS

PLANT SCHEDULE

SCIENTIFIC NAME	COMMON NAME	QUANTITY	SIZE	SPACING	REMARKS
TREES					
WASHINGTONIA FILIFERA	CALIFORNIA FAN PALM	10	10'-12' B.T.H.	PER PLAN	SKINNED
SHRUBS					
AGAVE DESMETTIANA 'VARIEGATA'	VARIEGATED AGAVE	20	5 GAL.	PER PLAN	
DASYLIRION WHEELERI	DESERT SPOON	4	15 GAL.	PER PLAN	
LANTANA MONTEVIDENSIS	LANTANA	13	1 GAL.	PER PLAN	
MUHLENBERGIA DUBIA	PINE MUHLY	40	1 GAL.	PER PLAN	

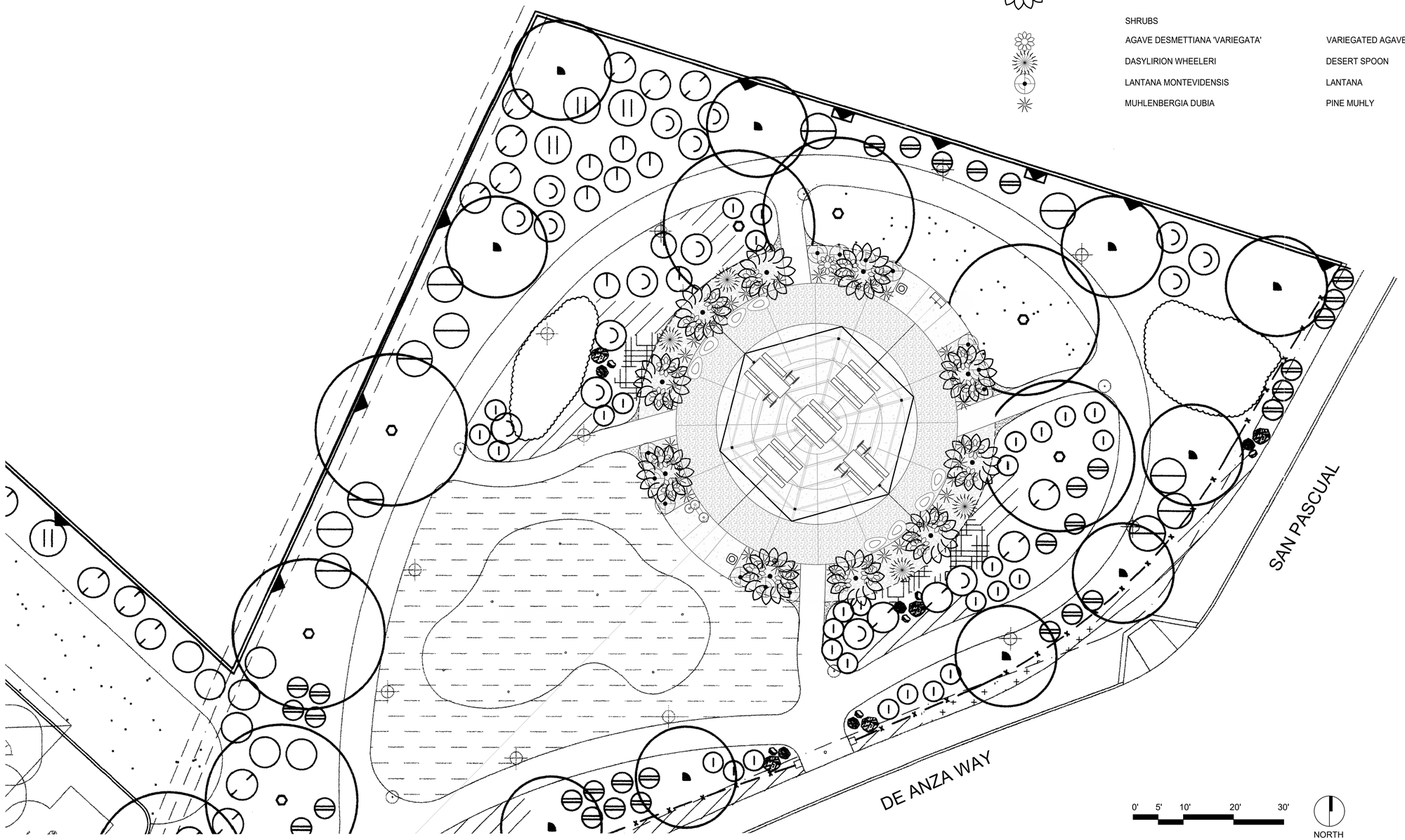

PLANTING NOTES

1. THESE PLANS WERE PREPARED USING THE ORIGINAL CONSTRUCTION PLANS PROVIDED BY THE CITY OF PLAM DESERT. THE CONTRACTOR IS RESPONSIBLE FOR VERIFYING THE ACCURACY OF THE PLANS COMPARED TO ACTUAL FIELD CONDITIONS PRIOR TO ORDERING MATERIALS AND BEGINNING WORK. IF THERE ARE DISCREPANCIES BETWEEN THE PLANS AND FIELD CONDITIONS, THE CONTRACTOR SHALL NOTIFY THE LANDSCAPE ARCHITECT OF RECORD TO WORK OUT A SOLUTION AGREEABLE TO THE OWNER. IF THE CONTRACTOR FAILS TO NOTIFY THE LANDSCAPE ARCHITECT OF RECORD OF THE DISCREPANCIES PRIOR TO BEGINNING WORK, THE CONTRACTOR SHALL BE RESPONSIBLE FOR ANY ADDITIONAL LABOR AND MATERIALS AS DIRECTED BY THE LANDSCAPE ARCHITECT OF RECORD TO RESOLVE SUCH DISCREPANCIES AT NO ADDITIONAL COST TO THE OWNER.
2. THE CONTRACTOR IS RESPONSIBLE FOR DETERMINING THE LOCATION OF ALL UTILITIES PRIOR TO ORDERING MATERIALS AND BEGINNING WORK. THE CONTRACTOR SHALL CLEARLY MARK ALL UTILITIES AND SHALL BE RESPONSIBLE FOR PRESERVING ALL UTILITIES THROUGHOUT CONSTRUCTION. THE CONTRACTOR SHALL ASSUME FULL RESPONSIBILITY FOR REPAIRING DAMAGED UTILITIES AT NO ADDITIONAL COST TO OWNER.
3. THE CONTRACTOR SHALL BE RESPONSIBLE FOR REPAIRING OR REPLACING ANY EQUIPMENT AND MATERIALS DAMAGED DURING CONSTRUCTION WITHIN OR OUTSIDE THE PROJECT LIMIT OF WORK.
4. THE CONTRACTOR IS RESPONSIBLE FOR COORDINATING AND VERIFYING ALL CONDUIT AND IRRIGATION SLEEVES WITH OTHER CONSTRUCTION TRADE CONTRACTORS.
5. REFER TO SPECIFICATIONS FOR ADDITIONAL REQUIREMENTS.

DATE: 12-12-23 100% CONSTRUCTION DOCUMENTS

NO.	REVISIONS	APPROVED	DATE

IN-SITE LANDSCAPE ARCHITECTURE, INC.
2907 Shelter Island Drive #105-417
San Diego, CA 92106 619-795-7603 www.insitelandarch.com

DRAWN BY RM/TJ
CHECKED BY TJ

LICENSED LANDSCAPE ARCHITECT — Tom Jachlewski — No. 4047 — 12-12-23 — STATE OF CALIFORNIA

APPROVED BY CITY OF PALM DESERT

DATE

CITY OF PALM DESERT, CALIFORNIA
PALMA VILLAGE PARK – SHADE STRUCTURE PROJECT
PLANTING PLAN, PLANT SCHEDULE, & NOTES
PORTION OF N 1/2 OF SEC. 15, T. 5 S., R. 7 E., S.B.M.

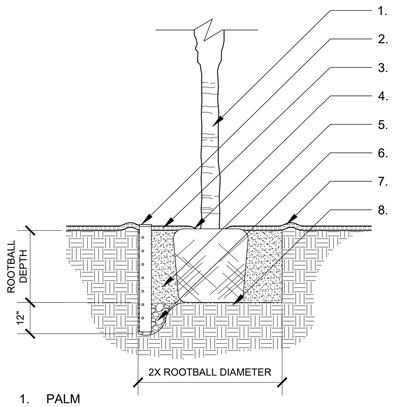

1. PALM
2. 4" PVC SCH 40 PERFORATED PIPE AND DRAIN GRATE CAP - WRAP IN FILTER SOCK, PROVIDE (1) PER PALM
3. MULCH MATERIAL PER PLANS, PROVIDE 3" CLEARANCE FROM TRUNK
4. SET TOP OF ROOTBALL 1" ABOVE FINISH GRADE
5. SAND BACKFILL PER SPECIFICATIONS
6. 1 CU FT. OF 3/4" WASHED GRAVEL
7. 4" HIGH WATERING BERM
8. SLOPE BOTTOM OF PLANTING PIT TO CORNER WITH DRAIN

PALM

WITH BREATHER TUBE

P-01

SCALE: 1/2" = 1'-0"

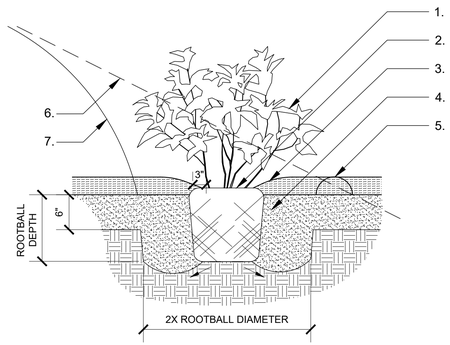

1. SHRUB
2. SET TOP OF ROOTBALL 1" ABOVE FINISH GRADE (5 GAL. SHRUBS AND GREATER)
3. MULCH MATERIAL PER PLANS, PROVIDE 3" CLEARANCE FROM TRUNK
4. BACKFILL PER NOTES AND SPECIFICATIONS (OMIT COMPOST BELOW 12" DEPTH)
5. 3" WATERING BERM (IF SLOPE PLANTING)
6. ORIGINAL SLOPE (WHEN PLANTING OCCURS ON SLOPE)
7. FINISH GRADE (WHEN PLANTING OCCURS ON SLOPE)

SHRUB

ON LEVEL GRADE OR SLOPE

P-02

SCALE: 1" = 1'-0"

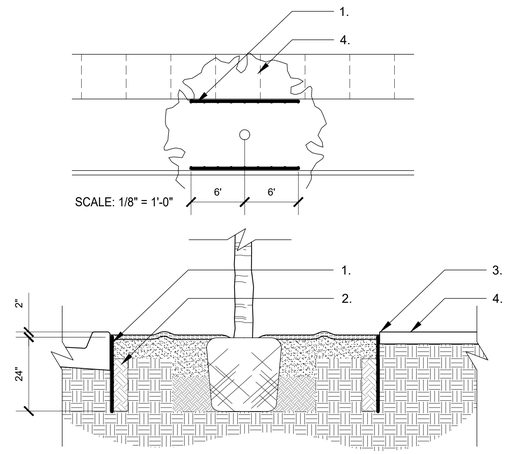

1. ROOT BARRIER "DEEPROOT" (UB 24-2)
2. ROOTBARRIER TRENCH MAY BE THE SAME AS IRRIGATION WHERE APPLICABLE - BACKFILL SAME AS ADJACENT MATERIAL
3. SET ROOT BARRIER 2" BELOW FINISH GRADE OF HARDSCAPE
4. HARDSCAPE

ROOTBARRIER

REQUIRED WHEN TREE IS WITHIN 6 FEET OF HARDSCAPE

P-03

SCALE: 1/2" = 1'-0"

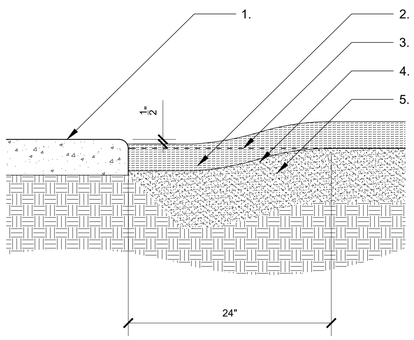

1. HARDSCAPE/ PAVEMENT
2. 3" MULCH LAYER (1.5" FOR FLATTED GROUNDCOVER)
3. ORIGINAL GRADE
4. GRADE TRANSITIONS TO ACCOMODATE MULCH LAYER 1/2" BELOW HARDSCAPE SURFACE
5. PLANTING MIX/ AMENDED SOIL

MULCH/ GRADE TRANSITION

AT HARDSCAPE

P-04

SCALE: 1 1/2" = 1'-0"

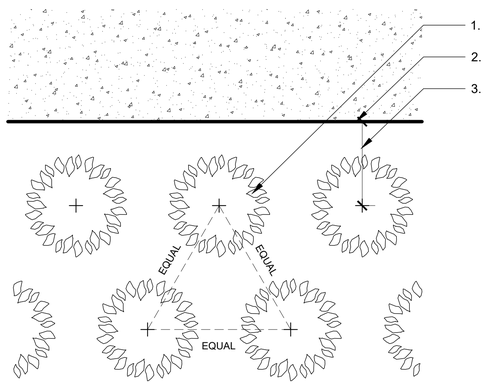

1. SHRUB - TRIANGULAR SPACING UNLESS OTHERWISE SHOWN ON PLANS
2. EDGE OF HARDSCAPE
3. DISTANCE FROM EDGE OF HARDSCAPE EQUALS 75% OF THE ON CENTER (O.C.) SPACING

PLANT SPACING

P-05

SCALE: NONE

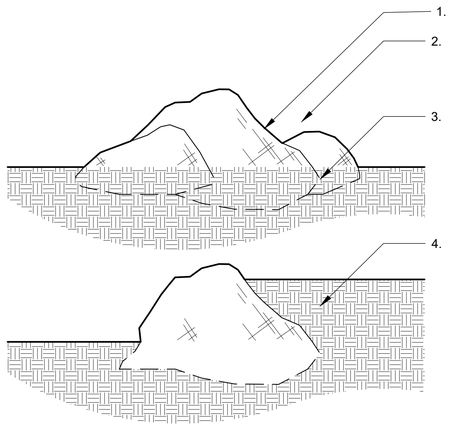

1. BOULDER
2. ARRANGE IN "NATURAL" GROUPINGS PER PLANS
3. BURY THE BOULDERS SO THEIR WIDEST PARTS ARE JUST BELOW THE SURFACE.
4. USE BOULDERS TO RETAIN SLOPE WHEN APPROPRIATE

BOULDER

WITHIN LANDSCAPE

P-06

SCALE: 1" = 1'-0"

NO.	REVISIONS	APPROVED	DATE

IN-SITE LANDSCAPE ARCHITECTURE, INC.
2907 Shelter Island Drive #105-417
San Diego, CA 92106 619-795-7603 www.insitelandarch.com

DRAWN BY RM/TJ
CHECKED BY TJ

LICENSED LANDSCAPE ARCHITECT — Tom Jachimowski — No. 4867 — 11-30-23 — 12-12-23 — STATE OF CALIFORNIA

APPROVED BY CITY OF PALM DESERT

DATE

CITY OF PALM DESERT, CALIFORNIA
PALMA VILLAGE PARK – SHADE STRUCTURE PROJECT
PLANTING DETAILS
PORTION OF N 1/2 OF SEC. 15, T. 5 S., R. 7 E., S.B.M.

SHEET 10 OF 17 SHEETS

DATE: 12-12-23 100% CONSTRUCTION DOCUMENTS

SECTION 329300
LANDSCAPING

PART 1 - GENERAL

1.01 SUMMARY:

A. The work includes all services, labor, materials, transportation and equipment necessary to perform the work indicated on the Drawings and as specified. The conditions of the Contract and Division 1 apply to this section as fully as if repeated herein.

1.02 RELATED REQUIREMENTS:

A. Section 328400 Irrigation System

B. Section 320533 Landscape Maintenance

1.03 SUBMITTALS:

A. Submit the following for tree, shrub, and plant samples: Provide one PDF file illustrating one typical photo labeled with scientific name, cultivar, and size of each plant species and every species listed as 'specimen' in the Plant Schedule on the Plans. Digital Photos will be used as a baseline standard for plant size, fullness, and condition and will be used to compare the remainder of the plant materials for the project at the project site during installation. At the Contractor's option and expense, he may retain the services of the Landscape Architect to review trees tagged at the nursery or at its place of growth.

B. Submit certificates of compliance/ manufacturer cut sheets in one pdf file of:

1. Soil amendments
2. Fertilizers
3. Root barrier
4. Tree stakes
5. Tree ties
6. Compost material
7. Mulch materials
8. Edging materials (if specified on plans)
9. Boulders, cobble or other materials (if specified on plans)

C. Submit horticultural soils report and recommendations report as one PDF file (based on the proposed plant palette per Section 1.08.)

1.04 GUARANTEES AND REPLACEMENTS:

A. Shrubs, vines and groundcovers shall be guaranteed to remain healthy and vigorously growing for a period of ninety (90) days from date of final acceptance of Maintenance Period of project.

B. Trees shall be guaranteed to live in a healthy condition for a period of one (1) year from date of final acceptance of Maintenance Period of project.

C. Plants found to be dead or not in a vigorous condition within the Maintenance and Guarantee Periods shall be replaced within fourteen (14) days at Contractor's expense.

D. Plants used for replacement shall be the same kind and size as specified in the plant list. They shall be furnished, planted and fertilized as originally specified. The expense of all repair work on existing improvements damaged during replacement shall be borne by the Contractor.

1.05 QUALITY ASSURANCE:

A. Reviews herein specified shall be made by the Landscape architect or Landscape Inspector. The Contractor shall request review in writing a minimum of five business days in advance, for the following parts of work:

1. Pre-job meeting to introduce Landscape architect, Landscape Inspector, Contractor, job project manager and job superintendent and to discuss the particular requirements of the job.
2. Incorporation of soil conditioning and fertilizing into the soil. Observation shall begin prior to amendments being rototilled into the soil. Amendment materials shall be distributed in piles around the site in quantities corresponding to the soils analysis recommendations "per 1,000 sq. ft.". Invoices showing materials and quantities purchased shall be available for review.
3. When trees, shrubs and vines are spotted in place (in their containers or boxes) for planting, but before planting holes are excavated.
4. Upon completion of finish grades and planting.
5. When planting, and all other indicated and specified work, except the Maintenance Period, has been completed. Acceptance, in writing, shall establish beginning of the Maintenance Period.
6. Final review at the completion of the Maintenance Period. Contingent on acceptance, this review shall establish the beginning date for the Guarantee Period.

1.06 MAINTENANCE:

A. The Contractor shall continuously maintain all involved areas during the progress of the work and during the maintenance period until the final acceptance of the work.

B. The Maintenance Period begins on the first day after written acceptance of planting operations is received from the Landscape architect, and shall continue thereafter for no less than ninety (90) continuous calendar days.

C. The contract completion date of the contract maintenance period will be extended, at the contractor's expense, when in the opinion of the Landscape Architect or Owner, improper maintenance or possible poor or unhealthy condition of planted material or poorly established areas are evident at the termination of the scheduled maintenance period. The Contractor shall be responsible for additional maintenance of the work until work is completed and acceptable.

D. See Section 320533 for specific Maintenance Requirements.

1.07 GENERAL REQUIREMENTS:

A. The term "Planting Area" shall mean all areas to be planted with trees, shrubs, groundcovers, sod and seed.

B. Actual planting shall be performed during those periods when weather and soil conditions are suitable in accordance with locally accepted horticultural practice.

C. All rock and other growth or debris accumulated during the duration of the project shall be removed from the site.

D. Prior to excavation for planting or placing of plant materials, locate all underground improvements, utility lines, etc. and take proper precautions to avoid damage. In the event of a conflict between such lines and plant locations, notify Landscape architect and receive direction prior to proceeding. The Contractor assumes responsibility for making repairs for damages resulting from work as herein specified.

E. Grading and soil preparation work shall be performed only during the period when beneficial and optimum results may be obtained. If the moisture content of the soil should reach such a level that working it would destroy soil structure, spreading and grading operations shall be suspended until the moisture content is increased or reduced to acceptable levels and the desired results are likely to be obtained.

F. Scaled dimensions are approximate. Before proceeding with work, carefully check and verify dimensions and immediately inform the Landscape architect of discrepancies between the drawings and specifications and actual conditions.

G. Quantities for plant materials are shown for convenience only, and not guaranteed. Contractor shall check and verify count and supply the sufficient number to fulfill intent of drawings.

H. Adequately stake, barricade, and protect irrigation equipment, manholes, utility lines, and other existing property during all phases of the soil amending and grading operations.

I. Rejection and Substitution: Plants not conforming to the requirements herein specified shall be considered defective, and such plants, whether in place or not, shall be marked as rejected and be immediately removed from the site of the work and replaced with acceptable plant materials. The plant materials shall meet all applicable inspections required by law. Plants shall be of the species, variety, size, age, flower color and condition as specified herein and/or as indicated on the drawings. Under no condition will there be any substitution of plant species, variety, or reduced sizes for those listed on the accompanying drawings, except with the expressed written consent of the Landscape architect.

J. All utilities (water and electricity) used during the installation and maintenance of the landscaping and irrigation systems for this project shall be paid for by the Owner.

1.08 FINAL SOIL AMENDMENT QUANTITIES:

A. Upon completion of all rough grading operations of planted areas, a minimum of six (6) representative samples (or 1 soil sampling per every 7 lots for home developments) of existing soil found in the planting areas shall be taken by the Contractor and at his/her expense sent to an independent soil testing laboratory for an Horticultural suitability analysis and recommendations.

B. In order to reduce runoff and encourage healthy plant growth, a soil management report shall be completed as follows:

1. Soil sampling shall be conducted in accordance with laboratory protocol, including protocols regarding adequate sampling depth for the intended plants.
2. The soil analysis shall include:
   a. Soil texture
   b. Infiltration rate determined by laboratory test or soil texture infiltration rate table
   c. Soil pH
   d. Total soluble salts
   e. Sodium
   f. Percent organic matter
3. The soil report shall include recommendations for quantity and application rate of amendments and any corrective measures required to adjust items a. though f. listed above to acceptable levels BASED ON THE PROPOSED PLANT SCHEDULE. The recommendations shall be based on organic-based fertilizers, amendments and best-practices. These recommendations shall then be compared with those listed in Paragraphs 2.02 and 3.01 and the contract modified accordingly.

1.09 SOIL PREPARATION CONFORMANCE

Amendment materials shall be distributed in piles around the site in quantities corresponding to the soils analysis "per 1,000 sq. ft." recommendations. Invoices showing materials and quantities purchased shall be available for review. The Landscape architect may visually compare the distribution piles and total quantities of each material furnished against the soils analysis recommendations, but it is the responsibility of the contractor to fulfill and verify compliance with the recommendations of the soil analysis report. After visual observation by the Landscape architect and verification by the contractor of the distribution and quantities of soil amendments, the Contractor may then commence with soil conditioning operations per section 3.01

1.10 PLANT MATERIAL QUANTITY CONFORMANCE

A. After installation of plant materials, and coinciding with the pre-maintenance observation, the Landscape architect, with the heretofore specified signed copies of the required certificates, trip slips and invoices for the plant materials and related items, may inventory such material and observe the total area and/or the amounts specified. It is the contractor's responsibility to verify all quantities have been installed per plans. If the required amounts have not been furnished, the Landscape architect may require the installation of additional materials to fulfill the minimum requirements specified.

PART 2 - PRODUCTS

2.01 SOIL AMENDMENT AND FERTILIZER:

A. Soil Conditioner: Composted Derivatives equivalent to "Humic Compost" manufactured by Agri-Service, Inc. and having the following properties: Humic Compost shall have fine texture and a dark brown color. Compost feedstock shall be clean yard trimmings generated from source-separated landscape maintenance. No animal wastes or sludge wastes shall be added. The shredded yard trimmings shall be composted for a minimum period of one month, with peak temperatures reaching between 132° to 155° F throughout the thermophilic stage. Composting shall be done by the windrow method with regular turning to expose all parts of the pile to high temperatures in order to achieve weed seed and pathogen kill. Product shall be processed according to Title 14 regulations for composted green waste. Curing phase shall be up to two months. Moisture content at time of delivery shall be approximately 25%. One cubic yard of compost shall weigh an average of 950 to 1150 pounds. Finished compost shall be screened through a 3/8 inch mesh.

B. Gypsum shall be commercially processed and packaged gypsum (CaSo, 2H 0) with minimum 80% grade containing 14% minimum combined sulfur.

C. Iron Sulphate: Ferric or ferrous sulphate in pelleted or granular form containing not less than 18 percent metallic iron. Material shall conform to the Horticultural Code of the State of California.

D. Pre-plant fertilizer for incorporation with rototilling or plant pit backfill mix shall be of a uniform 'beaded' homogeneous Organic granular composition suitable for application with approved equipment and shall contain the following minimum available percentages by weight of plant food:

1.	Nitrogen	5% minimum
2.	Phosphoric acid	3% minimum
3.	Potash	1% minimum
4.	Iron	1%
5.	Manganese	.05%
6.	Zinc	.05%
7.	Humic Acids (derived from compost)	15%
8.	Soil Penetrant (alkyl naphthalene sodium sulfonate)	15%

E. Post-planting Fertilizer for Maintenance Period Fertilization: Organic base, long lasting, non-burning, controlled slow release, free flowing, uniform in composition, suitable for application with approved equipment, and shall contain the following minimum available percentages of weight of plant food :

1.	Nitrogen	12% minimum
2.	Phosphoric acid	8% minimum
3.	Potash	8% minimum
4.	Sulphur	7%
5.	Iron	2%
6.	Manganese	.05%
7.	Zinc	.05%
8.	Humic Acids (derived from compost)	5%

WARNING: Some fertilizers contain chelated iron which may cause staining of concrete surfaces. Contractor shall use extreme caution when applying fertilizers adjacent to concrete and hardscape areas. All hardscape shall be swept immediately after application. Contractor shall be responsible for removing all iron stains from concrete or Hardscape by sandblasting, or replacement of Hardscape/concrete, as directed by landscape architect, at no additional cost to the Owner.

F. Planting Tablets: Tightly compressed organic chip type commercial grade planting tablets of varying weighted sizes with the following available percentages by weight of plant food:

1.	Nitrogen	20% minimum
2.	Phosphoric acid	10% minimum
3.	Potash	5% minimum

G. Post-planting Fertilizer for Palms: Organic base, long lasting, non-burning, controlled slow release, free flowing, uniform in composition, suitable for application with approved equipment, and shall contain the following minimum available percentages of weight of plant food :

1.	Nitrogen	3% minimum
2.	Phosphoric acid	1% minimum
3.	Potash	3% minimum

A micro-nutrient foliar spray for palm fronds is recommended to avoid micro-nutrient deficiencies. It is the responsibility of the contractor to ensure plant health.

H. Fertilizer Storage: Fertilizer shall be stored in watertight container to minimize contact with stormwater runoff.

I. Herbicide Storage: Herbicide shall be stored in watertight container to minimize contact with stormwater runoff.

2.02 PLANTING BACKFILL FOR TREES:

A. Planting backfill shall be a thoroughly blended mixture of topsoil amendments. The following materials and quantities are to be used as a basis for bidding, and shall be modified based on soil analysis results:

1.	Soil Conditioner (Humic Compost)	1 part (top 12" of backfill only)
2.	Stock-piled on site soil	3 parts
3.	Iron sulphate	2 lbs/per cu. yd. of mix
4.	Gypsum	10 lbs/per cu. yd. of mix
5.	Pre-plant fertilizer	4 lbs/per cu. yd. of mix

Soil to be used as planting medium for the project shall be fertile, well-drained, of uniform quality, free of stones over 1 inch diameter, sticks, oils, chemicals, plaster, concrete and other deleterious materials. On-site soil may be stockpiled in piles under 4' in height for re-use provided it meets all requirements.

2.03 PLANT MATERIALS:

A. Nomenclature: The scientific and common names of plants herein specified conform with the approved names given in "Sunset Western Garden Book", published by Lane Publishing Company, Menlo Park, California, latest edition.

B. See list of plant material on drawings.

C. Quality and size of all plants shall be No. 1, of Pinto Tag stock. They shall be vigorous, of normal growth, free from disease, insects, insect eggs, and/or exceed the measurements specified or the American Standards for Nursery Stock. Pinto Tags shall be submitted to the Landscape architect.

D. Container stock (1 gal., 5 gal., and 15 gal.) shall have grown in containers for at least six months, but not over two years. No container plants that have cracked or broken balls of earth, when taken from the container, shall be planted, except upon special approval. No trees with damaged roots or broken balls shall be planted and no shrubs, vines or groundcovers shall be planted that are "pot bound" or that have damaged roots.

E. Pruning shall not be done, prior to delivery, except by written approval.

F. Observation of Plant Materials, required by governing authorities, shall be a responsibility of the contractor, and where necessary, the contractor shall have secured permits or certificates prior to delivery of plants to site.

G. Plants shall be subject to observation and approval or rejection, at the project site at any time before or during progress of work, for size, variety, condition, latent defects and injuries. Rejected plants shall be removed from the project site immediately.

H. Substitutions will not be permitted except that if proof is submitted that any plant specified is not obtainable, a proposal will be considered for use of the nearest equivalent size, variety and cost.

I. Quantities shall be furnished as needed to complete work as shown on drawings.

J. The Landscape architect reserves the right to observe root condition of any species, particularly those grown from seed, and if found defective, to reject the plants represented by the defective sample.

K. Identify plant species or varieties correctly on legible, weather-proof labels attached securely at the job site. There shall be a minimum of one labeled plant for each 5 plants in a lot.

L. Groundcover plants shall be healthy cuttings grown in flats until transplanting.

2.04 MULCHING MATERIAL:

A. As specified on plans.

2.05 ROOT BARRIERS FOR TREES:

A. #UB-24-2 root barriers as manufactured by Deep Root Corp. or approved equal.

DATE: 12-12-23 100% CONSTRUCTION DOCUMENTS

NO.	REVISIONS	APPROVED	DATE

IN-SITE LANDSCAPE ARCHITECTURE, INC.
2907 Shelter Island Drive #105-417
San Diego, CA 92106 619-795-7603 www.insitelandarch.com

DRAWN BY RM/TJ
CHECKED BY TJ

LICENSED LANDSCAPE ARCHITECT Tom Jachlewski No. 4847 11-30-25 12-12-23 STATE OF CALIFORNIA

APPROVED BY CITY OF PALM DESERT
DATE

CITY OF PALM DESERT, CALIFORNIA
PALMA VILLAGE PARK – SHADE STRUCTURE PROJECT
PLANTING SPECIFICATIONS
PORTION OF N 1/2 OF SEC. 15, T. 5 S., R. 7 E., S.B.M.

PART 3 - EXECUTION

3.01 SOIL CONDITIONING, ROTOTILLING AND FERTILIZING:

I. After the areas have been graded, follow the Soil Preparation Conformance procedures per section 1.09. Deep water leaching shall be performed if recommended and as specified in the Horticultural Soil Analysis Report. After approval by the Landscape architect of the requirements in section 1.09, the soil conditioning and amendment materials shall be evenly spread over all planting areas and shall be thoroughly scarified to an average depth of six (6) inches by rototilling a minimum of two (2) alternating passes (excluding 2:1 slopes or steeper):

The following materials and quantities are to be used as a basis for bidding, and shall be modified based on soil analysis results:

1. Soil Conditioner (Humic Compost): 6 cu. yd. per 1,000 sq. ft. (2" deep)*

   *Minimum required unless soils report states at least 33% organic matter exists within the top six inches of soil.

2. Soil sulphur: 20 lbs/per 1,000 sq. ft.
3. Iron sulphate: 20 lbs/per 1,000 sq. ft.
4. Gypsum: 100 lbs/per 1,000 sq. ft.
5. Pre-plant fertilizer: 20 lbs/per 1,000 sq. ft.
   (a) Amendments shall be incorporated into the top six (6) inches of finish grade.
   (b) The thoroughness and completeness of the rototilling and incorporation of the soil conditioners/amendments shall be accepted by the landscape architect in writing, prior to digging planting pits. For slopes 2:1 and steeper, or as per the drawings, omit rototilling.

3.02 FINISH GRADING:

A. Finish grades shall be as indicated on landscape or civil drawings. Contractor shall notify Landscape architect for a decision should any discrepancies exist between the drawings and site conditions.

B. Finish grades shall be measured as the final water compacted and settled surface grades and shall be within + 0.1 foot of the spot elevations and grade lines indicated. Grades adjacent to hardscape shall be within +/- .01 feet of the grades indicated on the grading plans.

C. Molding and rounding of the grades shall be provided at all changes in slope.

D. All undulations and irregularities in the planting surfaces resulting from tillage, rototilling and all other operations shall be leveled and floated out before planting operations are initiated.

E. Take every precaution to protect and avoid damage to erosion control materials, sprinkler heads, irrigation lines, and other underground utilities during grading and conditioning operations.

F. Final finish grades shall insure positive drainage of the site with all surface drainage away from buildings, walls, and toward swales, basins, roadways, drains and catch basins.

G. Final grades shall be accepted by the Landscape architect/Owner's representative in writing on company letterhead prior to digging planting pits and/or before planting operations will be allowed to begin.

H. Planting surfaces shall be graded with no less than 2 percent surface slope for positive drainage unless otherwise indicated on grading plans.

3.03 PLANTING:

A. The layout of locations for plants and outlines of groundcover beds to be planted shall be accepted by the Landscape architect in writing prior to digging plant pits for planting. All such locations shall be checked by the contractor for possible interference with existing underground piping prior to excavation of holes. If underground construction or utility lines are encountered in the excavation of planting areas, other locations for the planting may be selected by the landscape architect at no additional cost to the owner. Damage to existing utilities shall be the responsibility of the contractor.

B. Planting Trees, Shrubs and Vines:

1. All excavated holes shall have vertical sides with roughened surfaces and shall be of the minimum sizes indicated on drawings. Holes shall be, in all cases, large enough to permit handling and planting without injury or breakage of root balls or roots.
2. Excavation shall include the stripping and stacking of all acceptable soil encountered within the areas to be excavated for plant pits and planting beds. Protect all areas that are to be trucked over and upon which soil is to be temporarily stacked pending its re-use for the filling of holes, pits and beds.
3. Excess soil, generated from the planting holes shall be spread evenly on the site within the tolerances indicated in section 3.02, or as directed by the Landscape architect. Excess soil (beyond the tolerances indicated in section 3.02) shall be removed from the site.
4. The plants shall be planted at approved locations with the heretofore specified plant pit fertilizer and soil planting backfill. Place plant pit fertilizer after two thirds of backfill material is installed at the rates specified by the manufacturer and soils report.
5. The plants shall be placed in the planting pits, which have been hand tamped, and water settled to the rootball base levels prior to the placement of the plants. After setting the plants, the remaining backfill material shall be carefully tamped and settled around each rootball to fill all voids. Each tree and shrub shall be placed in the center of the hole and shall be set plumb and held rigidly in position until the planting backfill has been tamped around each rootbal.
6. All plants shall be set at such a level that after settling they bear the same relationship to the surrounding finish grade as they bore to the soil line grade in the container, unless otherwise noted.
7. No plant will be accepted if the rootball is broken or cracked, either before, during, or after the process of installation.
8. Plants shall be thoroughly watered into the full depth of each planting hole immediately after planting.
9. Install shrubs and vines as shown on the drawings.
10. For 1 gallon trees, utilize pre-installed nursery stakes if stakes are in good condition as described above. Broken, cracked and/or unsecured nursery stakes will not be allowed. If new stakes are required, install stakes with materials as specified as shown on the drawings.
11. For trees up to 36" Box size, install tree stakes with materials specified and as shown on the drawings. The stakes shall be driven in plumb and secure. Special care shall be taken that the driving in of the stake does not damage the tree roots or rootball. Tree ties shall be fastened to each stake by tacking the wire tie to the stake. Protective hoses shall be in contact with all tree trunk or branch areas per the details on the drawings.
12. For trees 48" Box size and greater, guy all trees with the materials specified and as shown on the drawings.
13. The staking and guying shall be accomplished in such a manner as to insure the proper and healthy growth and the safety of the plants, property, and the public.
14. The contractor shall be responsible for all surface and subsurface drainage required which may affect his guarantee of the trees, shrubs, and vines.
15. Pruning after planting shall be required on all trees, shrubs, and vines when necessary to provide the specified or approved standard shapes, form and/or sizes characteristic to each plant. Pruning may include thinning, and/or cutting and shall be under the direction of the landscape architect or certified arborist.
16. Install tree guards on all trees within turf areas.

C. Planting Groundcovers:

1. Groundcovers shall be planted in the areas indicated on the drawings. The groundcover plants shall be rooted cuttings grown in flats and shall remain in those flats until transplanting.
2. All groundcover plants shall be planted with soil around roots in staggered row, evenly spaced at the intervals called out on the drawings.
3. The groundcover plants shall be planted sufficiently deep to cover all roots.
4. The groundcover planting area shall be hand smoothed after planting to provide an even, smooth final finish grade.

3.04 MULCHING:

A. Landscape areas other than those hydroseeded or planted with turf shall be covered with the specified mulching material to the minimum depth indicated on the drawings.

3.05 CLEAN-UP:

A. As the project progresses on a daily basis, the contractor shall maintain all areas in a neat manner and remove unsightly debris as necessary, remove all debris and containers used in accomplishing work and sweep and clean all sidewalks, asphalt, and concrete areas adjacent to plantings.

3.06 SITE OBSERVATION & WALK-THROUGHS FOR SUBSTANTIAL COMPLETION:

A. General Observation: The Landscape architect will visit the construction site at interim times during the construction process to access construction progress regarding installation of landscape material to be in compliance with the drawings, details, specifications and site conditions. The Landscape architect will prepare a site report after each visit noting progress of installation, verbal communication with the contractor and identifying any field adjustments necessary that require modifications to the designed landscape. A copy of this site report will be delivered to both the owner and the contractor. The contractor is responsible to immediately address each item on the site report before proceeding with further construction.

B. Walk Through For Substantial Completion (Punch List #1):

1. Before requesting a walk through for substantial completion the following requirements must be entirely satisfied:
   (a) The entire planting area is completely installed, and when letters of acceptance as described above have been obtained from the Landscape architect and/or owner's representative. If the contractor failed to notify the Landscape architect for any of the above items as listed above than the contractor assumes full responsibility for any design modifications directed by the Landscape architect during the walk through for substantial completion any of these issues at no additional cost to the owner.
   (b) All invoices, pinto tags and receipts have been delivered to the owner or owner's representative.
2. Once the above requirements have been met a walk through for substantial completion may be requested. The following procedures will be used during the walk through:
   (a) A visual walk through of the entire site will take place consisting of an examination of planting areas as compared to the drawings, and installation procedures as shown on the details and specifications. A punch list will be established for deficiencies in the construction and workmanship of the landscaped area as compared to the construction drawings, details, and specifications.
3. Once the Walk Through for Substantial Completion has been completed the Landscape architect will provide a copy of all punch list items to the owner for review and distribution to the contractor. It is the contractor's responsibility to repair, replace, and adjust all items on the punch prior to requesting a final walk through.

C. Final Walk Through:

1. Before commencement of a final walk through is requested, each item on the walk through for substantial completion (punch list #1) must be thoroughly satisfied, addressed, and resolved by the contractor.
2. Once the above requirement has been met a final walk through may be requested. The following procedures will be used:
   (a) This visual walk through will consist of walking through the punch list items created at the time of the walk through for substantial completion, and examining outstanding items. Any remaining deficiencies in the construction and workmanship of the landscape as compared to the punch list generated at the time of the walk through for substantial completion, construction drawings, details and specifications shall be corrected by the contractor.

3.07 MAINTENANCE PERIOD:

A. The Maintenance Period shall last for ninety (90) days after written notification from the Landscape architect to the owner of a successful final walk through. The notification shall take place once all items on the final walk through punch list have been satisfactorily addressed by the contractor.

1. The contractor is responsible for obtaining and following any maintenance manuals created specifically for the project from the owner at the beginning of the maintenance period.
2. Once the contractor has fulfilled all maintenance agreement obligations the maintenance period will end see section 320533 Landscape Maintenance, for maintenance responsibilities.

END OF SECTION 329300

NO.	REVISIONS	APPROVED	DATE

IN-SITE LANDSCAPE ARCHITECTURE, INC.
2907 Shelter Island Drive #105-417
San Diego, CA 92106 619-795-7603 www.insitelandarch.com

DRAWN BY RM/TJ
CHECKED BY TJ

LICENSED LANDSCAPE ARCHITECT
Tom Jachlewski
No. 4847
11-30-25
12-12-23
STATE OF CALIFORNIA

APPROVED BY CITY OF PALM DESERT

DATE

CITY OF PALM DESERT, CALIFORNIA
PALMA VILLAGE PARK – SHADE STRUCTURE PROJECT
PLANTING SPECIFICATIONS
PORTION OF N 1/2 OF SEC. 15, T. 5 S., R. 7 E., S.B.M.

DATE: 12-12-23 100% CONSTRUCTION DOCUMENTS

SECTION 320533
LANDSCAPE MAINTENANCE

PART 1 - GENERAL

1.01 SUMMARY

A. The work includes all services, labor, materials, transportation and equipment necessary to perform the work indicated on the Drawings and as specified. The conditions of the Contract and Division 1 apply to this section as fully as if repeated herein.

1.02 RELATED REQUIREMENTS:

A. Section 328400 Irrigation System

B. Section 329300 Landscaping

1.03 DEFINITIONS:

A. Pesticide: Includes any of the following:

1. Fumigant
2. Herbicide
3. Insecticide
4. Fungicide
5. Rodent repellents.

B. Planting Bed: An area comprised of trees, shrubs, flowers, and ground cover, excluding grass.

1.04 DELIVERY:

A. Fertilizer, Gypsum, and Iron Sulphate: Deliver to the site in original containers bearing manufacturer's chemical analysis, name, trade name, or trademark, and indication of conformance to state and federal laws. Instead of containers, fertilizer, and gypsum may be furnished in bulk with a certificate indicating the above information.

B. Pesticides: Deliver to the site in original containers with legible label indicating Environmental Protection Agency (EPA) registration number and manufacturer's registered uses.

1.05 STORAGE:

A. Fertilizer, Gypsum, Iron Sulphate, and Mulch: Store in dry locations away from contaminants in water-tight containers.

B. Pesticides: Do not store with other maintenance material. Store herbicides "downwind," relative to the airflow from other pesticides in water-tight containers.

1.06 HANDLING:

A. Do not drop or dump materials from vehicles.

PART 2 - PRODUCTS

2.01 PH ADJUSTERS:

A. See Specification Section: 329300 Landscaping

2.02 SOIL CONDITIONERS:

A. See Specification Section: 329300 Landscaping

2.03 PLANTING BACKFILL:

A. See Specification Section: 329300 Landscaping

2.04 FERTILIZERS:

A. See Specification Section: 329300 Landscaping

2.05 WATER:

A. See Specification Section: 329300 Landscaping

2.06 PESTICIDES:

A. See Specification Section: 329300 Landscaping

PART 3 - EXECUTION

3.01 MAINTENANCE REQUIREMENTS DURING THE NINETY (90) DAY MAINTENANCE PERIOD:

A. Shrubs, and Vines:

1. The contractor is responsible for the restoration and maintenance of all vegetation included in these specifications for the duration of the maintenance period. During the first two weeks of the maintenance period, the contractor shall conduct a survey of all areas and identify by quantity, species, and location, all dead, dying, and diseased vegetation. The contractor shall be responsible for restoring dying and diseased vegetation to a healthy state in accordance with accepted Horticultural Practice and Treatment. The landscape architect and/or owner's representative will be the final authority in determining which vegetation is considered dead or irreparably damaged. Restoration and replacement of vegetation is considered routine maintenance and shall be accomplished as often as necessary during the maintenance period. Vegetation replacement shall be accomplished within 5 days after the contractor discovers or has been notified of the situation. Diseased or dead vegetation shall be removed and replaced with healthy plants of the same species. All replacement plants must be approved by the landscape architect and/or owner's representative before planting.

2. Planting beds shall be cultivated, pruned, trimmed, weeded, irrigated, fertilized, mulched, and otherwise maintained in a manner that presents a professionally landscaped appearance at all times. Plant beds shall be kept weed, gopher, squirrel, rabbit and pest free through best management practices. Ground cover shall not be allowed to grow into flowers, shrubs or trees. Planting beds shall be maintained in a manner that provides balance between the various types of vegetation, and prevents dominance of any one species.

3. The contractor shall provide and maintain a minimum of three-inch layer of mulch in all planting areas that were originally mulched (one and one half-inch for flatted groundcover areas). Mulch shall be kept 3" clear from all tree, shrub, and groundcover trunks and stems.

4. The contractor shall provide for the special needs of various species. Diseased or dead vegetation shall be removed and replaced with healthy plants of the same species.

5. The contractor shall maintain the soil level in the plant beds, and ensure all surface root systems and irrigation piping are covered as required. The contractor shall be responsible for damage caused by contractor operations at no additional cost to the owner.

6. Shrubs and Vines shall not be allowed to encroach into turf areas. A definite break shall be maintained between grass and shrub areas. In such areas the contractor shall maintain a healthy and well balanced landscape.

7. All shrubs, vines, and other cultivated plants shall be trimmed and pruned <u>ACCORDING TO THEIR NATURAL GROWTH CHARACTERISTICS</u> (accept for hedges) for proper health and attractive appearance. <u>ALLOW SHRUBS TO GROW IN AND COMPLETELY FILL THE PLANTING AREAS (DO NOT SHEAR INTO BALLS OR OTHER SHAPES.)</u> All clippings shall be removed and disposed of by the end of each day. Pruning shall be accomplished as necessary in accordance with conditions (a) through (d) specified below. Shrubs and vines shall be trimmed to shape for aesthetic appearance and health at the frequency specified in this section.

(a) Remove growth in front of windows, over entrance ways or walks, and any growth which will obstruct vision at street intersections. Shrubs around perimeter of buildings shall be trimmed to maintain natural growth characteristics.

(b) Remove dead, damaged or diseased branches or limbs and crossing, rubbing and interfering branches.

(c) Evenly form and balance the shrub to natural growth characteristics. Hedges are to be trimmed to maintain their natural growth characteristics and not allowed to obstruct pedestrian walkways. Shrubs shall be allowed to completely fill planter beds. Shrubs, hedges and vines shall not be trimmed into round, square and or geometric shapes unless specified in the Plant Schedule. Side growth shall be allowed to grow unless growth is in front of windows, over entrance ways, streets, driveways, parking area or walks, and/or any growth which will obstruct vision at street intersections.

(d) Remove growth against or over structures and into any type of electrical or telephone lines (leave vine growth on block walls if applicable).

8. Shrubs shall be pruned to evenly form and balance plant to natural growth characteristics. Shoots, suckers, and branches of shrubs not conforming to desired shape and size shall be removed. Retain typical growth habit of individual plants with as much height and spread as is practical. Shrubs shall be allowed to completely fill planter beds.

9. Any depression or mound around the base of shrubs intended to retain water in place for proper irrigation shall be maintained in good condition to permit the most efficient application of water and reduce waste.

B. Trees:

1. Tree maintenance and care is considered routine ongoing maintenance and shall be accomplished as specified or as often as necessary during the maintenance period. Tree maintenance and care includes, staking trees, adjustment of ties and supports, removal of stakes, watering, fertilization, pest control, pruning, turf clearance, mulch clearance, removal of broken limbs and branches, tree removal/replacement, and fall cleanup.

2. The contractor shall maintain and/or replace tree staking and guying as necessary as specified in section 329300 Landscaping for the duration of the maintenance period. Stakes, ties and supports shall be inspected and adjusted monthly to prevent girdling and rubbing, and to promote natural development of trees. Stakes, ties, and supports shall be removed when the tree becomes capable of supporting itself.

3. Trees shall be pruned according to their natural growth characteristics to evenly form and balance the tree and to promote proper health and growth in accordance with accepted standards and horticultural practices of the International Society of Arboriculture, Western Chapter. All tree maintenance must be performed in compliance with ANSI Z133.1 Safety Standards and ANSI A300 Standard Practices for Tree Care Operations. Tree pruning shall include all areas of the project, which are permanently and/or temporarily irrigated for the duration of the maintenance period. All sucker growth shall be removed from and around the trees. All trees are to be inspected monthly to identify pruning needs. Pruning or trimming shall be accomplished at any time during the maintenance period as required in accordance with conditions (a) through (h) below:

(a) Remove dead, damaged or diseased wood, or structurally weak limbs that may cause a safety hazard. Remove interfering branches, crossing and rubbing branches.

(b) Remove branches which endanger roofs, eaves, and windows or hang within eight feet of sidewalks, parking lot driveways, and which obstruct traffic signs or streetlights. This includes removal of dead or broken branches on the ground or still hanging in the tree.

(c) Provide clearance for fire trucks, buses, moving vans and similar vehicles along streets.

(d) Eliminate and prevent growth into electrical or telephone transmission lines. Anticipate the effects of wind on branches, which might fall on transmission lines. Shape the entire tree rather than notch the top.

(e) Prevent growth of trees in front of windows, over entranceways and walkways and which will obstruct vision at street intersections.

(f) Remove partially attached broken limbs and branches from trees regardless of diameter or length. Provide stakes or braces as required for future protection.

(g) "Skirting-Up" and "pollarding" a tree is prohibited.

(h) Topping of trees is prohibited.

C. Weeds, Rodent and Pest Control:

1. <u>PESTICIDES MAY BE USED ONLY AS A LAST RESORT AFTER ALL NATURAL BEST MANAGEMENT PRACTICES ARE USED.</u> Weed and pest control shall be performed to prevent encroachment of undesirable vegetation and noxious weeds, and infestation of pest (rodent, insect and fungus) into established landscapes, including lawns and around trees, shrubs, flower beds, etc. Noxious weeds in landscaped and natural growth areas, plant beds and landscaped areas shall not be allowed to establish themselves and be maintained weed free. Additionally, weed control is to be performed to eliminate grass and weeds in cracks and joints on all paved and concreted areas. Weed control is to be performed to prevent the encroachment of vegetation into perimeter fences. Rodent control shall be performed as required to maintain healthy vigorous plant growth. Live or dead rodents shall be removed within 24 hours from the project property and properly disposed of. Trees, shrubs, turf and vegetation shall be protected from all varieties of insect and rodent damage. Pesticides and herbicides shall be used in a manner, which will not affect landscape plants health.

2. All pesticides, including herbicides, insecticides, fungicides, etc., shall be applied only by persons holding a valid state license for each category of pest control work involved. Any required state, county, or local permits for possession, procurement, or use of any pesticide shall be obtained and complied with at no additional expense to the owner.

3. All pesticides shall be procured, transported, stored, handled, and applied in strict accordance with the manufacturer's label, which shall be registered with the Environmental Protection Agency and the State of California. The contractor shall comply with the requirements of the Federal Insecticide, Fungicide, and Rodenticide Act, 40 CFR 170-171, CCR Title 3, and CCR Title 8. All pesticide containers shall be managed in accordance with therequirements of CCR Title 3, Section 6684 and disposed of in accordance with CCR Title 22. Each pesticide formulation shall be registered for use under the particular environmental conditions under which it was applied. The contractor shall exercise extreme care to prevent any damage or illegal contamination by pesticides to vegetation, water, fish, animals, and humans. The contractor shall be held responsible and liable for all damage, contamination, and effects resulting from contractor's pesticide use.

4. Pesticide spraying shall be performed only on still days and will be stopped when unfavorable weather or other conditions exist which would unduly increase the hazard to personnel or desirable vegetation by drift, runoff, or leaching through the soil. Any project property or desirable vegetation damaged by the contractor due to pesticide applications shall be repaired or replaced at no additional cost to the owner.

5. Pesticide rinse water or excess pesticides from contractor operations shall be collected by the contractor in an appropriate receptacle and disposed of at an approved disposal site; or shall be applied to a similar target area to which the original application was made and in the same manner of application if allowed by the EPA registered label.

6. Job site pesticide applications shall be made by personnel capable of identifying the pest species to be controlled, knowledgeable of control techniques, and able to apply pesticide active ingredients at prescribed dosages and rates of application, as required by the label to achieve the required control under job site conditions, without danger to people, pets or other non-target animals, plants, or property.

7. The contractor shall be responsible for having a spill kit on service vehicles and for reporting and cleaning pesticide spills as required by state laws and regulations. The contractor shall submit a written report of spills on or in project property, within 8 hours of incident to the owner on company letterhead.

D. Irrigation and Irrigation System Maintenance:

1. The contractor shall plan and adjust irrigation schedules for automatic, hand or portable irrigation systems based on minimal water requirements with the following considerations:the precipitation rates of irrigation components

(a) soil water infiltration rate and holding capacity

(b) exposure

(c) plant material

(d) site climate conditions

(e) ET (Evapotranspiration) rate

(f) Slope

It shall be the contractor's responsibility to adjust controllers and/or hand/portable irrigation application to compensate for weekly environmental changes for the duration of the maintenance period. The contractor shall perform irrigation in a manner that promotes the health, growth, color and appearance of cultivated vegetation while preventing over watering, water run-off, erosion and ponding.

2. <u>CONTRACTOR SHALL ENSURE SMART CONTOLLER IS SET TO WEATHER-BASED OR SOIL MOISTURE BASED "AUTOMATIC ADJUSTMENT" 60 DAYS INTO THE MAINTENANCE PERIOD. CONTRACTOR SHALL ENSURE "AUTOMATIC ADJUSTMENT" IS FUNCTIONING PROPERLY BETWEEN DAY 60 THROUGH DAY 90 OF THE MAINTENANCE PERIOD AND FINE-TUNE EACH STATION AS NEEDED.</u>

3. Irrigation includes watering of shrubs, vines, trees and plants for both permanently irrigated slopes and flat areas. Care shall be exercised by regulating the time and equipment to prevent wasting of water. Rotator heads shall be adjusted to prevent water spray on buildings, sidewalks, walls, sign monuments and adjacent hardscape. It shall be the contractor's responsibility to apply enough water to assure and maintain the health and vigor of all shrubs, trees, and planted areas. Irrigation controllers shall be programmed for no irrigation during periods of rain. Controllers shall also be checked and reset if necessary after power outages.

4. The contractor shall provide all equipment necessary to perform all irrigation operations. For temporarily irrigated slopes, flat areas and trees that require manual irrigation, the contractor shall provide hoses and irrigation equipment to adequately irrigate this plant material for the duration of the maintenance period. In the event that an area has no water supply due to a system failure, the contractor shall provide a supply by either hose or truck. All valves and valve box covers shall be kept closed at all times except when in actual use.

5. Irrigation equipment shall be kept clear of any obstructions including plant material. Dirt or other debris surrounding rotator heads, which prevents proper operation, shall be removed. The contractor shall be held responsible for any damage to project property caused by careless handling of irrigation equipment including slope failure at no additional cost to the owner.

6. The contractor is responsible for the maintenance and repair of all components of the irrigation system for the duration of the maintenance period. This includes irrigation equipment items as shown on the original irrigation drawings. Maintenance and repairs of irrigation equipment during the maintenance period shall be done at no additional cost to the owner. Maintenance shall include but not be limited to the following:

(a) Repair or replace broken, missing, or inoperative pop-up rotator heads, pop-up rotors, pop-up bubblers, and drip irrigation equipment.

(b) Repair or replace defective rotator head risers, rotors on risers, fittings, swing arms and breaks in piping. Adjust and align risers. Repairs shall include all fittings as specified in the original irrigation drawings.

(c) Clean and adjust pop-up rotator heads, pop-up rotors, rotator head risers and rotors on risers and their gears and/or mechanisms, check and adjust for proper coverage.

(d) Remove dirt and debris from around pop-up rotator heads and pop-up rotors.

(e) Repair or replace defective or malfunctioning control valves (Electric and/or Manual) flow sensors and master valves. Clean and service valves. The contractor shall replace any damaged or missing valve boxes or valve lids. Valve box lids shall be kept in place at all times. Barricades shall be placed over any valve boxes with missing lids until replaced. Valve boxes shall be kept level with existing grade as shown on the drawings.

(f) Flush drip irrigation system using manual flush valves.

(g) Maintain, service, repair or replace controller systems as specified by the product manufacturer.

(h) System repairs and replacement shall be accomplished with new parts and equipment that are identical to existing.

(i) The contractor is responsible for required irrigation by any means during the periods of system breakdown.

E. Fertilizer Application During the Maintenance Period:

1. Apply fertilizer in a manner that promotes health, growth, color and appearance of cultivated vegetation at applications rates described in section 329300 Landscaping for the duration of the maintenance period.

2. Fertilizer shall be applied to CA Native plants based on horticultural practices specifically for CA Native plants (typically no fertilizer or minimum organic, slow-release fertilizer.)

F. Fallen Vegetation and Debris Removal:

1. The contractor shall police the entire project area including all paved areas, planters, lawn areas, sidewalks and trash enclosures and collect fallen leaves, branches and limbs regardless of length or diameter, dead vegetation, paper, trash, cigarette butts, garbage, rocks, and any and all other debris to prevent unsightly and inordinate accumulations during normal maintenance working hours. Sidewalks shall be swept as necessary to keep free of trash and graffiti. Collected items shall be promptly removed and taken to a legal disposal site.

G. Removal of Dead Animals:

1. Removal and legal disposal of animal carcasses are considered a normal maintenance task for the duration of the maintenance period. Dead carcasses shall be legally removed immediately when discovered by the contractor.

H. Erosion Control:

1. The contractor is responsible for daily visual inspection of slopes and immediately reporting areas experiencing erosion to the Landscape architect and/or owner's representative on the same day noticed. If the contractor fails to notify the Landscape architect and/or owner's representative of areas experiencing erosion on the same day noticed, then the contractor assumes full responsibility for any erosion control measures and/or repairs as directed by the landscape architect and/or owner's representative at no additional cost to the owner.

2. Upon notification and agreement of the applicable erosion control measure by the Landscape architect, the owner and the contractor, the contractor is responsible for immediately repairing and correcting any progressive rilling that may occur.

3. Erosion control measures may include but not be limited to:

(a) Filling

(b) Raking

(c) Redirecting runoff

(d) Properly programming irrigation operations

(e) Replanting

(f) Providing additional erosion control materials such as:

(1) jut matting
(2) filter fabric
(3) hay bales
(4) hay rolls
(5) silt fencing
(6) sand bags
(7) and/or other erosion control items as required to maintain healthy plant material and stable slopes.

Additional erosion control measures required due to irrigation operations programmed by the contractor that did not take into account cycle and soak functions of the controller will be installed and/or repaired as directed by the Landscape architect and/or owner's representative at no additional cost to the owner.

I. Frequency of Maintenance Operations:

TASK:	FREQUENCY:
1. Mowing, Edging, Trimming:	Weekly
2. Shrub and Vine Restoration and Replacement:	Within 5 days
3. Weeding:	Weekly
4. Pruning:	Monthly
5. Tree Replacement:	Within 5 days
6. Tree Staking:	As Required
7. Best Management Practices:	As Required
8. Debris Removal & Disposal:	As Required
9. Irrigation System Maintenance:	As Required
10. Fertilizer Application:	As Required
11. Fallen Vegetation and Debris Removal:	As Required
12. Removal of Dead Animals:	As Required
13. Re-Mulching (Maintained at 3 Inches):	As Required
14. Erosion Control:	As Required

J. At the end of the ninety (90) day maintenance period, the contractor shall request a post-maintenance walk through with the Landscape architect.

K. Preliminary Post Maintenance Walk Through: Once the maintenance requirements have been met a preliminary post maintenance walk through may be scheduled. At the preliminary post maintenance walk through, the following procedures will be used:

1. Contractor must have (2) two personnel available with radio communication for the entire length of the walk through.

2. A visual walk through of the entire landscape area will take place consisting of an examination of planting areas and noting any remaining maintenance items to be completed.

3. Once the preliminary post maintenance walk through has been completed, the Landscape architect shall prepare a punch list of outstanding items to be completed and will provide a copy of this list to the owner and contractor for review and use. It is the contractor's responsibility to repair, replace, and adjust all items on the punch list prior to requesting a final post maintenance walk through.

L. Final Post Maintenance Walk Through: Before commencement of a final post maintenance walk through, each item on the preliminary post maintenance walk through punch list must be thoroughly satisfied, addressed, and resolved by the contractor. Once the above requirement has been met a final post maintenance walk through may be requested. At the final post maintenance walk through, the following procedures will be used:

1. Contractor must have (2) two personnel available with radio communication for the entire length of the walk through.

2. This visual walk through will consist of walking through the punch list items created at the time of the preliminary post maintenance walk through, and examining outstanding items. Any remaining deficiencies in the maintenance requirements will be noted.

3. Once the final post maintenance walk through is completed and any outstanding items created on the final punch list have been addressed the maintenance period may end. Any additional walk throughs required due to contractors' inability to address all issues on the punch lists described above will be provided at the contractor's expense.

END OF SECTION 320533

DATE: 12-12-23 100% CONSTRUCTION DOCUMENTS

NO.	REVISIONS	APPROVED	DATE

IN-SITE LANDSCAPE ARCHITECTURE, INC.
2907 Shelter Island Drive #105-417
San Diego, CA 92106 619-795-7603 www.insitelandarch.com

DRAWN BY RM/TJ
CHECKED BY TJ

LICENSED LANDSCAPE ARCHITECT — Tomasz Jachlewski — No. 4947 — 11-30-23 to 12-12-23 — STATE OF CALIFORNIA

APPROVED BY CITY OF PALM DESERT

DATE

CITY OF PALM DESERT, CALIFORNIA
PALMA VILLAGE PARK – SHADE STRUCTURE PROJECT
MAINTENANCE SPECIFICATIONS
PORTION OF N 1/2 OF SEC. 15, T. 5 S., R. 7 E., S.B.M.

I HAVE COMPLIED WITH THE CRITERIA OF THE STATE AND LOCAL WATER EFFICIENT LANDSCAPE ORDINANCE AND APPLIED THEM ACCORDINGLY FOR THE EFFICIENT USE OF WATER IN THE IRRIGATION PLAN.

PIPE SIZING CHART

0 TO 5 GPM	3/4" SCH 40 PVC PIPE
5 TO 10 GPM	1" SCH 40 PVC PIPE
10 TO 15 GPM	1-1/4" SCH 40 PVC PIPE
15 TO 25 GPM	1.5" SCH 40 PVC PIPE

NOTE:
CONTRACTOR SHALL SIZE ALL LATERAL LINES PER PIPE SIZING CHART, IN NO INSTANCE SHALL PIPE SIZE EXCEED DESIGNATED GPM RANGE.

IRRIGATION LEGEND

	ITEM	MANUFACTURER	MODEL	DESCRIPTION	DETAIL
NO SYMBOL	EXISTING IRRIGATION POC WITH ANTISIPHON DEVICE				
XX	EXISTING CONTROLLER				
	CONTROL VALVE	HUNTER	ICV-101G-FS-AS-ADJ	1" ICV SERIES W/ PRESSURE REGULATOR (5 TO 20 GPM)	I-04, I-05
	LATERAL LINE	AS APPROVED	SCH 40 PVC	REFER TO DETAIL FOR INSTALLATION DEPTH	I-06, I-07
	SLEEVE OR CONDUIT	AS APPROVED	SCH 40 PVC	REFER TO DETAIL FOR INSTALLATION DEPTH	I-06, I-07
P	DRIP EMITTER (CONNECT TO THE EXISTING DRIP VALVE LATERAL LINE)	BOWSMITH	SL 206 EMITTER	REFER TO PLANTING PLAN FOR ACTUAL PLANT QUANTITY AND LOCATIONS. INSTALL (1) EMITTERS PER SHRUB ON THE HIGH SIDE OF THE PLANT. (0.6 GPH) (RISER LENGTH AS REQUIRED). VERIFY THE LAYOUT AND SPACING IN THE FIELD PRIOR TO STARTING WORK. INSTALL PER MANUFACTURER'S SPECIFICATIONS.	I-01
	BUBBLER (CONNECT TO THE EXISTING BUBBLER VALVE LATERAL LINE)	RAINBIRD	1401 EMITTER	REFER TO PLANTING PLAN FOR ACTUAL PLANT QUANTITY AND LOCATIONS. INSTALL (2) EMITTERS PER PALM ON THE HIGH SIDE OF THE PLANT. (0.25 GPM) VERIFY THE LAYOUT AND SPACING IN THE FIELD PRIOR TO STARTING WORK. INSTALL PER MANUFACTURER'S SPECIFICATIONS.	I-02
	WIRE CONNECTIONS	3M	DBR/Y-6	"DBY" OR "DBR" DIRECT BURY SPLICE KITS, FOR USE ON ALL WIRE CONNECTIONS.	I-03

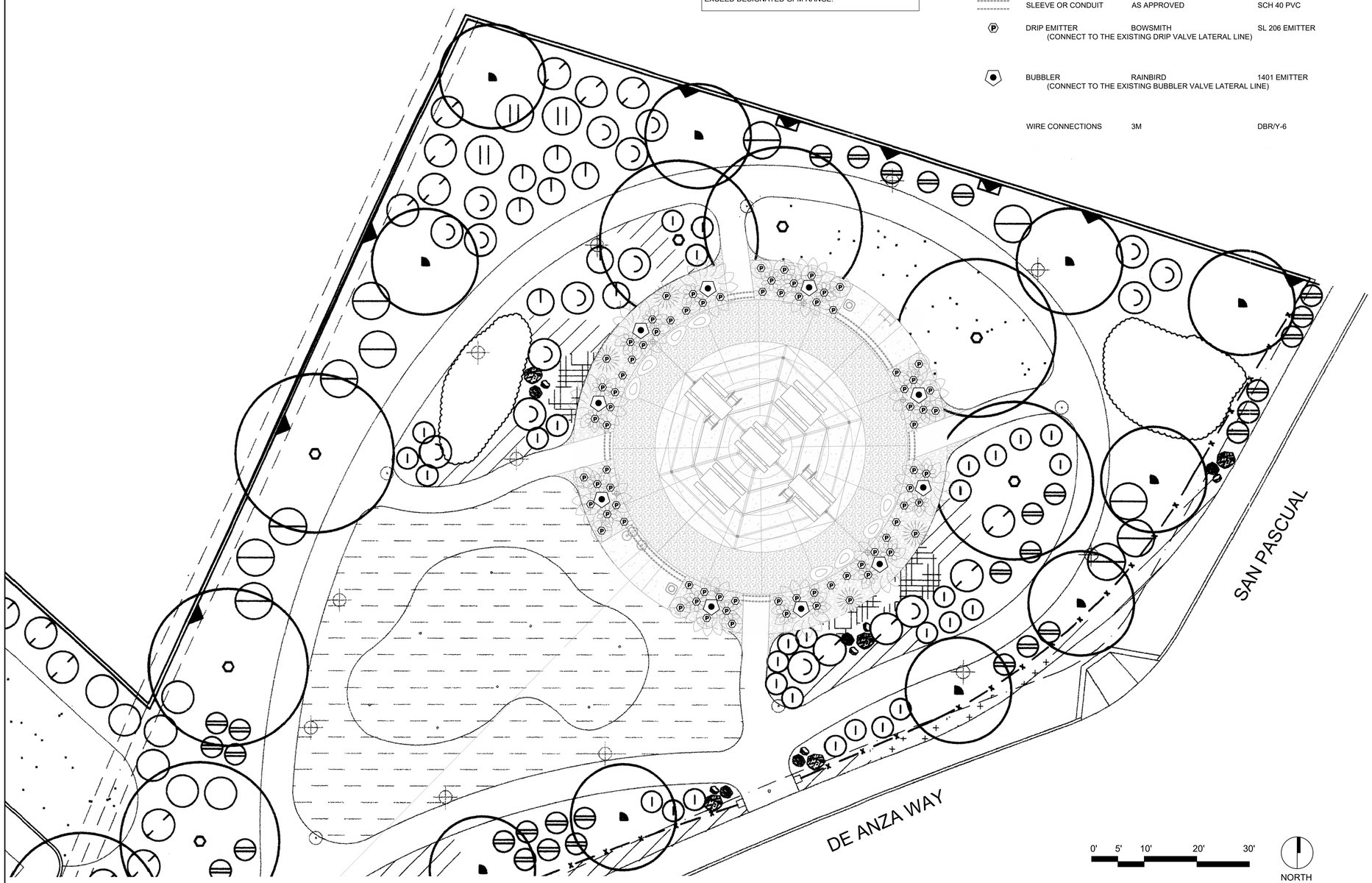

IRRIGATION NOTES

1. THESE PLANS WERE PREPARED USING BASE INFORMATION PROVIDED BY THE CITY OF PLAM DESERT. THE CONTRACTOR IS RESPONSIBLE FOR VERIFYING THE ACCURACY OF THE PLANS COMPARED TO ACTUAL FIELD CONDITIONS PRIOR TO ORDERING MATERIALS AND BEGINNING WORK. IF THERE ARE DISCREPANCIES BETWEEN THE PLANS AND FIELD CONDITIONS, THE CONTRACTOR SHALL NOTIFY THE OWNER TO WORK OUT A SOLUTION AGREEABLE TO THE OWNER. IF THE CONTRACTOR FAILS TO NOTIFY THE OWNER OF THE DISCREPANCIES PRIOR TO BEGINNG WORK, THE CONTRACTOR SHALL BE RESPONSIBLE FOR ANY ADDITIONAL LABOR AND MATERIALS AS DIRECTED BY THE OWNER TO RESOLVE SUCH DISCREPANCIES AT NO ADDITIONAL COST TO THE OWNER.
2. THE CONTRACTOR IS RESPONSIBLE FOR DETERMINING THE LOCATION OF ALL UTILITIES PRIOR TO ORDERING MATERIALS AND BEGINNING WORK. THE CONTRACTOR SHALL CLEARLY MARK ALL UTILITIES AND SHALL BE RESPONSIBLE FOR PRESERVING ALL UTILITIES THROUGHOUT CONSTRUCTION. THE CONTRACTOR SHALL ASSUME FULL RESPONSIBILITY FOR REPAIRING DAMAGED UTILITIES AT NO ADDITIONAL COST TO OWNER.
3. THE CONTRACTOR SHALL BE RESPONSIBLE FOR REPAIRING OR REPLACING ANY EQUIPMENT AND MATERIALS DAMAGED DURING CONSTRUCTION WITHIN OR OUTSIDE THE PROJECT LIMIT OF WORK.
4. THE CONTRACTOR IS RESPONSIBLE FOR COORDINATING AND VERIFYING ALL CONDUIT AND IRRIGATION SLEEVING WITH OTHER CONSTRUCTION TRADE CONTRACTORS.
5. THE LANDSCAPE IRRIGATION SYSTEM SHALL BE DESIGNED AND MAINTAINED TO PREVENT SPRAY ON STRUCTURES. FIELD ADJUST ALL SPRINKLERS TO ELIMINATE OVERSPRAY ONTO BUILDINGS, STRUCTURES, WALLS, SIDEWALKS, DRIVEWAYS, OR HARDSCAPE.
6. OBTAIN A STATIC WATER PRESSURE READING AT THE POINT-OF-CONNECTION PRIOR TO PROCEEDING WITH INSTALLATION. IF THE WATER PRESSURE FOUND IS DIFFERENT THAN SHOWN ON PLANS, CONTRACTOR SHALL NOTIFY LANDSCAPE ARCHITECT OF RECORD FOR FURTHER INSTRUCTIONS.
7. IRRIGATION PLAN IS DIAGRAMMATIC. CONTRACTOR IS RESPONSIBLE FOR INSTALLING THE IRRIGATION SYSTEM PER MANUFACTURER'S RECOMMENDATIONS AND ADJUSTING THE SYSTEM AS-NEEDED TO ACHIEVE UNIFORM COVERAGE.
8. THE “SMART” CONTROLLER SHALL PROGRAMMED PER MANUFACTURER'S INSTRUCTIONS AND SHALL BE SET TO “AUTOMATICALLY ADJUST” BASED ON WEATHER ON OR PRIOR TO DAY 60 OF THE MAINTENANCE PERIOD. THE CONTRACTOR SHALL CLOSELY MONITOR IRRIGATION AND FINE-TUNE THE CONTROLLER SETTINGS FOR EACH STATION DURING DAYS 61-90 OF THE MAINTENANCE PERIOD.
9. PROVIDE WIRE SLEEVES AT EACH PRESSURE SUPPLY LINE SLEEVE PER DETAILS AND SPECIFICATIONS.
10. REFER TO SPECIFICATIONS FOR ADDITIONAL REQUIREMENTS.

DATE: 12-12-23 100% CONSTRUCTION DOCUMENTS

NO.	REVISIONS	APPROVED	DATE

IN-SITE LANDSCAPE ARCHITECTURE, INC.
2907 Shelter Island Drive #105-417
San Diego, CA 92106 619-795-7603 www.insitelandarch.com

DRAWN BY RM/TJ
CHECKED BY TJ

LICENSED LANDSCAPE ARCHITECT — Eric Jachiewicz Jr. — No. 5047 — 11-30-25 — 12-12-23 — STATE OF CALIFORNIA

APPROVED BY CITY OF PALM DESERT
DATE

CITY OF PALM DESERT, CALIFORNIA
PALMA VILLAGE PARK – SHADE STRUCTURE PROJECT
IRRIGATION PLAN, LEGEND, & NOTES
PORTION OF N 1/2 OF SEC. 15, T. 5 S., R. 7 E., S.B.M.

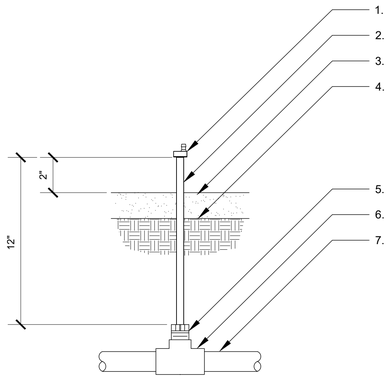

1. EMITTER / BUBBLER
2. 12" SCHEDULE 80 PVC RISER MAINTAIN 3" ABOVE FINISH GRADE
3. TOP OF MULCH
4. FINISH GRADE
5. 2-1/2" MARLEX STREET ELL
6. PVC SCH 40 TEE OR ELBOW LINE SIZE
7. PVC LATERAL PIPE

DRIP EMITTER

I-01

SCALE: N.T.S.

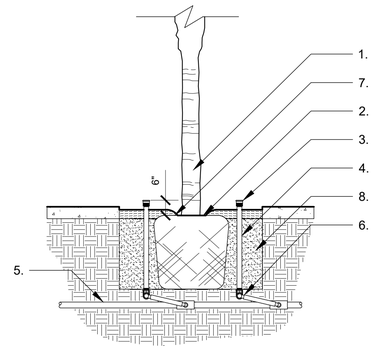

1. PALM
2. PALM ROOT BALL
3. RAINBIRD 1401 BUBBLER (2) PER PALM
4. PCV RISER -SCH 80
5. PVC LATERAL PIPE
6. SWING JOINT
7. MULCH MATERIAL PER PLANS, PROVIDE 3" CLEARANCE FROM TRUNK
8. SAND BACKFILL PER SPECIFICATIONS

PALM BUBBLER

I-02

SCALE: N.T.S.

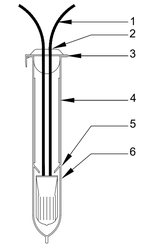

1. LOW VOLTAGE WIRES, 3 MAXIMUM
2. WIRES PASS THROUGH GROOVES IN TUBE LID TO ALLOW LID TO CLOSE
3. CLOSE TUBE LID AFTER WIRE IS INSERTED INTO TUBE
4. POLY TUBE PRE-FILLED WITH WATERPROOF GEL
5. LOCK TABS PREVENT WIRE REMOVAL ONCE CONNECTOR IS INSERTED
6. SCOTCHLOK ELECTRICAL SPRING CONNECTOR. WIRES SHALL BE PRE-STRIPPED OF 1/2" OF THE INSULATION PRIOR TO INSERTION INTO THE CONNECTOR. TWIST CONNECTOR ONTO WIRES TO SEAT FIRMLY. SCOTCHLOK CONNECTOR AND WIRES INSERTED INTO TUBE UNTIL THE CONNECTOR PASSES LOCK TABS

NOTE:
WIRE CONNECTOR SHALL BE A 3M DBY DIRECT BURY SPLICE KIT. KIT SHALL INCLUDE A SCOTCHLOK SPRING CONNECTOR, A POLYPROPYLENE TUBE AND A WATERPROOF SEALING GEL. TUBE SHALL BE SUPPLIED PREFILLED WITH GEL. DIRECT BURY SPLICE KIT SHALL BE USED TO ELECTRICALLY CONNECT 2 - 3 #14 OR 2 #12 PRE-STRIPPED COPPER WIRES. LARGER WIRES OR GREATER QUANTITIES OF WIRES SHALL REQUIRE A LARGER APPROVED WIRE CONNECTION.

WIRE SPLICE CONNECTION

FOR LOW VOLTAGE CONTROLLER WIRES

I-03

SCALE: N.T.S.

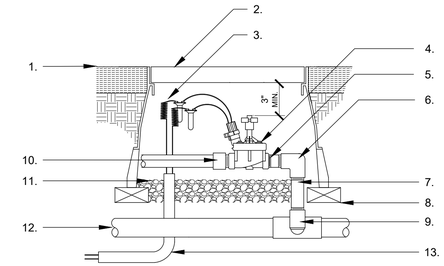

1. TOP OF MULCH
2. VALVE BOX WITH COVER
3. 30-INCH LENGTH OF WIRE, COILED - PROVIDE WATERPROOF CONNECTION AT SPLICE
4. REMOTE CONTROL VALVE - (REFER TO LEGEND)
5. PVC SCH 80 NIPPLE, CLOSE
6. PVC SCH 40 ELL
7. PVC SCH 80 NIPPLE, LENGTH AS REQUIRED
8. BRICK (4) LOCATIONS
9. PVC SCH 80 NIPPLE (2" LENGTH, HIDDEN) AND SCH 40 ELL AND SCH 40 ELL OR TEE
10. PVC SCH 40 MALE ADAPTER/ LATERAL LINE CONNECTION
11. 3-INCH MIN. DEPTH OF 3/4-INCH WASHED GRAVEL
12. PVC PRESSURE SUPPLY LINE PIPE
13. CONTROL WIRES IN SCH. 40 PVC ELECTRICAL CONDUIT CONTINUOUS TO CONTROLLER. (AQUASEAL / VAPOR LOCK OPEN END OF CONDUIT)
14. SEE VALVE IDENTIFICATION TAG DETAIL

REMOTE CONTROL VALVE

I-04

SCALE: N.T.S.

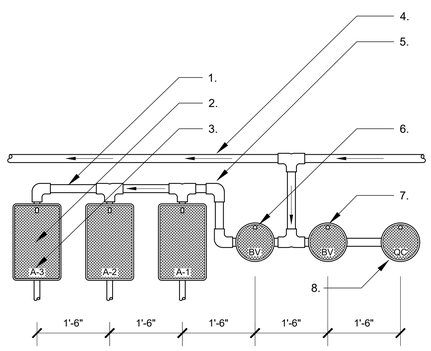

1. PVC SCH 40 MANIFOLD PIPE - SIZE PER PLANS (LOCATE UNDERNEATH VALVE BOXES)
2. ELECTRIC CONTROL VALVE
3. HEAT BRAND ALL VALVE BOXES PER SPECIFICATIONS
4. PRESSURE SUPPLY MAINLINE (SIZE PER PLANS)
5. CONTROL VALVE MANIFOLD (5 VALVES MAXIMUM)
6. BALL VALVE TO MANIFOLD
7. BALL VALVE TO QUICK COUPLER
8. QUICK COUPLER - PER PLANS

MANIFOLD CONFIGURATION

FOR CONTROL VALVES AND QUICK COUPLERS

I-05

SCALE: N.T.S.

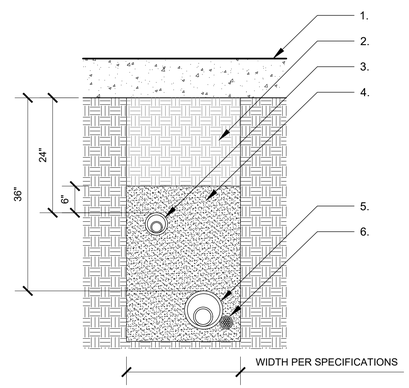

1. HARDSCAPE PAVING
2. BACKFILL MATERIAL (FREE OF ROCKS AND DEBRIS GREATER THAN 1")
3. NON-PRESSURE LATERAL LINE SLEEVE, SEE SPECIFICATIONS
4. CONSTRUCTION GRADE SAND
5. PRESSURE SUPPLY LINE SLEEVE, SEE SPECIFICATIONS
6. CONTROL WIRES IN SLEEVE, SEE SPECIFICATIONS

TRENCH

BELOW HARDSCAPE

I-06

SCALE: N.T.S.

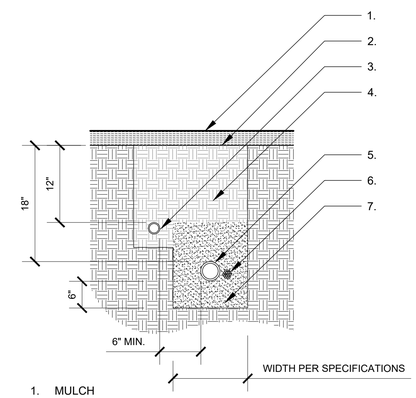

1. MULCH
2. FINISH GRADE
3. NON-PRESSURE LATERAL LINE, SEE SPECIFICATIONS
4. BACKFILL MATERIAL (FREE OF ROCKS AND DEBRIS GREATER THAN 1")
5. PRESSURE SUPPLY LINE, SEE SPECIFICATIONS
6. CONTROL WIRES, SEE SPECIFICATIONS
7. CONSTRUCTION GRADE SAND (6" ABOVE AND BELOW PRESURE SUPPLY LINE)

TRENCH

IN LANDSCAPE

I-07

SCALE: N.T.S.

DATE: 12-12-23 100% CONSTRUCTION DOCUMENTS

NO.	REVISIONS	APPROVED	DATE

IN-SITE LANDSCAPE ARCHITECTURE, INC.
2907 Shelter Island Drive #105-417
San Diego, CA 92106 619-795-7603 www.insitelandarch.com

DRAWN BY RM/TJ
CHECKED BY TJ

LICENSED LANDSCAPE ARCHITECT
Tom Jachimowicz Jr.
No. 4847
11-30-23
12-12-23
STATE OF CALIFORNIA

APPROVED BY CITY OF PALM DESERT

DATE

CITY OF PALM DESERT, CALIFORNIA
PALMA VILLAGE PARK – SHADE STRUCTURE PROJECT
IRRIGATION DETAILS
PORTION OF N 1/2 OF SEC. 15, T. 5 S., R. 7 E., S.B.M.

SECTION 328400
IRRIGATION SYSTEM

PART 1 - GENERAL

1.01 SUMMARY:

A. This section covers the furnishings of all materials and performing all operations to provide a complete operable landscape irrigation system as shown on the drawings including the following:

1. Trenching, stockpiling excavated materials and refilling trenches.
2. Irrigation system components including but not limited to: piping, backflow prevention devices and enclosures, valves, fittings, rotors, spray heads, controllers, wiring and final adjustments as determined by the landscape architect to insure efficient and uniform distribution.
3. Pipe connections to irrigation pump stations, water meters and backflow prevention devices.
4. Testing and inspection of irrigation system.
5. Clean-up and maintenance

B. The conditions of the Contract and Division 1 apply to this section as fully as if repeated herein.

1.02 RELATED REQUIREMENTS:

A. Section 329300 Landscaping

B. Section 320533 Landscape Maintenance

1.03 GENERAL REQUIREMENTS:

A. Code Requirements shall be those of State and Municipal Codes and Regulations locally governing this work, providing that any requirements of the Drawings and Specifications, not conflicting therewith but exceeding the Code Requirements shall govern, unless written permission to the contrary is granted by the Landscape architect.

B. Conform to the requirements of the reference information listed below except where more stringent requirements are shown or specified in the most current set of construction documents:

1. American Society for Testing Material (ASTM), for test methods specifically referenced in this section.
2. Underwriter's Laboratories (UL), for UL wires and cables.

C. Work involving substantial plumbing for installation of brass piping, backflow prevention devices and other related work shall be executed by a licensed and bonded plumbing contractor. Any necessary permits shall be obtained prior to beginning work.

D. Specified depths of pressure supply lines, laterals and pitch of pipes as stated in this section are minimums. Settlement of trenches lower than grades specified on the final grading plans is cause for removal of finish grade treatment, refilling trenches, recompacting and repairing of finish grade treatment.

E. Follow current printed manufacturer's specifications and drawings for items or information not specified or graphically indicated in the most current set of construction drawings.

F. Scaled dimensions are approximate and at times it is not possible to indicate offsets, fittings and other related equipment graphically on the construction drawings. Contractor shall be responsible for minor changes caused by actual site conditions. Before proceeding with any work, the Contractor shall carefully check and verify all dimensions of related landscape architectural elements, utilities and landscaping and furnish and install required fittings.

G. Do not install the irrigation system as shown on the construction drawings when it is obvious that actual field conditions such as physical obstructions, grading discrepancies and field dimensions vary from those recorded on the construction drawings. Immediately bring any such discrepancies to the attention of the landscape architect prior to proceeding with work. If immediate notification is not given and such discrepancies exist, the contractor shall assume full responsibility for necessary revisions, as determined by the landscape architect.

1.03 EXISTING FIELD CONDITIONS:

A. Preserve and protect all existing trees, plants, monuments, structures, hardscape and landscape architectural elements from damage due to work in this section. In the event that damage does occur to inanimate object and structures, the contractor shall repair or replace such damage to the satisfaction of the owner or owner's representative. Damage or injury to living plant material shall be replaced by the contractor at the contractor's expense.

B. Trenching or other work required in this section under the limb spread of existing trees shall be done by hand or by other methods so as to prevent damage or harm to limbs, branches and roots.

C. Trenching in areas where root diameter exceeds 2 inches shall be done by hand. Exposed roots of this size shall be heavily wrapped with moistened burlap to avoid scarring or excessive drying. Where a trenching machine is operated in proximity to roots that are less than 2 inches, the wall of the trench shall be hand trimmed , making clean cuts through roots.

D. Trenches adjacent to or under existing trees shall be closed within 24 hours, and when this is not possible, the side of trench closest to the tree or trees affected shall be covered with moistened burlap.

E. Protect, maintain and coordinate work with other contracts, specifications, trades, and utilities. Extreme care shall be exercised in excavating and working in the area due to existing utilities. Contractor shall be responsible for damages caused by their operations. In the event that damage does occur, the costs of such repairs shall be paid by the contractor unless other arrangements have been made with the owner.

F. Use caution where trenches and piping cross existing roadways, sidewalks, hardscape, paths or curbs. In the event that damage does occur, the contractor will repair such damage at the contractor's expense.

1.04 REQUIRED DOCUMENTS:

A. Submittals

1. Submit 1 (one) PDF file of all irrigation equipment to be used, manufacturer's brochures, service manuals, guarantees, and operating instructions for approval to the landscape architect prior to beginning work. Submittals should be in a bound form complete with table of contents. The contractor shall not proceed with work in the field until this submittal is approved in its entirety by the landscape architect.

B. Service Manuals

1. The Contractor shall furnish (4) four service manuals to the owner prior to scheduling a walk through for substantial completion. Manuals shall be submitted in a bound form complete with a table of contents, and workmanship form on company letterhead copy of contractor's warranty and shall contain complete enlarged drawings of all equipment installed showing component warranties and catalog numbers together with the manufacturer's name and address. Manuals shall include operation instructions. Manuals shall be subject to approval by the owner or owner's representative as to completeness.

C. Record Drawings/As-builts

1. Prior to beginning work in the field the contractor shall secure a complete set of irrigation plans at the original scale complete with details and specifications. The contractor shall be responsible for making a set of prints for every week on the project. At the end of each working day, the contractor shall record all work accomplished for that day on the set of prints in red ink. These record drawings shall be brought up to date at the end of each work week by a qualified draftsperson. The drawings should indicate the following:
   (a) Any zoning changes.
   (b) Dimension from two permanent points of reference (building corners, fixed hardscape corners, road intersections, or permanent existing utilities) the location of the following items:
      (1) Water meters.
      (2) Pump stations.
      (3) Connection to existing water lines.
      (4) Routing of pressure supply lines at every 100' along routing.
      (5) Backflow Prevention Devices
      (6) Flow Sensors
      (7) Master Valves
      (8) Isolation Ball Valves
      (9) Quick Coupling Valves
      (10) Air Release Valves
      (11) Electric Control Valves
      (12) Drip Valve Assemblies
      (13) Flush Valve Assemblies
      (14) Swing Check Valves
      (15) Central Control System Controllers
      (16) Grounding rods.
      (17) Control wire routing (if routed separately from pressure supply line).
      (18) Control wire splices that are outside of the controller.
      (19) Weather Station Equipment
      (20) Communication Equipment for Central Control System
      (21) Other equipment as directed by the landscape architect.
2. Prior to scheduling a walk through for substantial completion, provide a record set of field as-built drawings as described above to the landscape architect for review. After review, the landscape architect will return the as-built set to the field foreman requesting further information or will notify the owner that the record set of field as-builts drawings are complete. After approval from the owner, a walk through for substantial completion may be scheduled.
3. Prior to scheduling the final walk through, the final set of irrigation as-built drawings shall be professionally drafted in AutoCAD by the landscape architect.
4. The landscape architect and the contractor shall verify the final as-builts at the time of the final walk through and once successful the landscape architect shall deliver the final set of as-built drawings to the owner or owner's representative prior to initiating the maintenance period for the contractor.

D. Controller Charts

1. Prior to scheduling a walk through for substantial completion, provide a record set of field controller charts which have color coded each station within each controller to the landscape architect for review. After review, the landscape architect will return the controller charts to the field foreman requesting further information or will notify the owner that the record set of controller charts are complete. After approval from the owner, a walk through for substantial completion may be scheduled.
2. Prior to scheduling a final walk through, one set of controller charts shall be professionally drafted by the contractor for each controller unit installed on the project. The controller drawings shall be an actual AutoCAD reduction of the area covered by that controller unit and shall be at the maximum allowable scale that will fit inside the controller door without folding the drawing.
3. The landscape architect and the contractor shall verify each controller chart at the time of the final walk through and once successful, the contractor shall deliver the final set of controller charts to the owner or owner's representative (and one PDF file via email to the landscape architect and owner) prior to initiating the maintenance period for the contractor. The controller chart sent to the owner shall be hermetically sealed between two (2) pieces of minimum 20 mils thick plastic.
4. The contractor shall then permanently fix the controller chart to the inside of the applicable controller.

PART 2 - PRODUCTS

2.01 PIPING

A. General Piping:

1. Pipe sizes shown are nominal inside diameter unless otherwise noted.
2. Pipe shall be identified with the following indelible markings:
   (a) Manufacturer's name.
   (b) Nominal pipe size.
   (c) Schedule or class.
   (d) Pressure rating.
   (e) NSF (National Sanitation Foundation) seal of approval.
   (f) Date of extrusion.
3. All pipe shall be purple for Recycled Water points of connection.

B. Solvent Weld Pressure Supply Line:

1. Solvent Weld Pressure Supply Line: (downstream of Backflow prevention device) PVC CL315BE (1" - 3")
   (a) Manufactured from virgin polyvinyl chloride (PVC) compound in accordance with ASTM D2241 and ASTM D1784; cell classification 12454-B.
   (b) Type 1, Grade 1.
2. Fittings: Standard weight, Schedule 40, injection molded PVC, complying with ASTM D1784 and D2466, cell classification 12454-B.
   (a) Threads- Injection molded type (where required)
   (b) Tees and Ells- side gated
3. Threaded Nipples: ASTM D2464, Schedule 80 with molded threads.
4. Joint Cement and Primer: Type as recommended by manufacturer of pipe and fittings.

C. Non-Pressure Lines Below Grade:

1. Non-Pressure Lines: (downstream of electric remote control valve) PVC SCH 40.
2. Fittings: Standard weight, Schedule 40, injection molded PVC, complying with ASTM D1784 and D2466, cell classification 12454-B.
   (a) Threads- Injection molded type (where required)
   (b) Tees and Ells- side gated
   (c) Threaded Nipples: ASTM D2464, Schedule 80 with molded threads.
3. Joint Cement and Primer: Type as recommended by manufacturer of pipe and fittings.

D. Sleeving and Conduit:

1. All PVC sleeving for pressure supply line and non- pressure supply line shall be twice the nominal size of the pipe within and used for sleeves below grade as indicated in the following sleeve and conduit schedule:
2. Sleeving and Conduit Material Under Hardscape:
   (a) PVC SCH 40 for 1"-2 1/2" pressure supply line.
   (b) PVC SCH 40 for 3" and larger pressure supply line.
   (c) PVC SCH 40 for non- pressure lines.
   (d) (1) one ¾" PVC SCH. 40 conduit for up to 5 wires.
   (e) (1) one 1" PVC SCH. 40 conduit for up to 8 wires.
   (f) (1) one 1 ¼" PVC SCH. 40 conduit for up to 15 wires.
   (g) (1) one 1 ½" PVC SCH. 40 conduit for up to 20 wires
   (h) (1) one 2" PVC SCH 40 conduit for up to 30 wires.
   (i) (1) one 2 ½"" PVC SCH 40 conduit for up to 35 wires.
   (j) (1) one 3/4" PVC SCH 40 wire conduit for flow sensing cable.
   (k) (1) one 3/4" PVC SCH 40 wire conduit for master valve wire.

2.02 BACKFLOW PREVENTION DEVICE

A. Existing.

2.03 WYE STRAINER

A. Existing.

2.04 PRESSURE REGULATING VALVE

A. Existing.

2.05 MASTER VALVES

A. Existing.

2.06 FLOW SENSORS

A. Existing.

2.07 ISOLATION BALL VALVES FOR PRESSURE SUPPLY LINE

A. Existing.

2.08 QUICK COUPLING VALVES

A. Existing.

2.09 ELECTRIC CONTROL VALVES

A. Existing.

2.10 DRIP VALVE ASSEMBLIES:

A. Existing..

2.11 ALL IRRIGATION EMISSION DEVICES:

All irrigation emission devices must meet the requirements set in the American National Standards Institute (ANSI) standard, American Society of Agricultural and Biological Engineers'/International Code Council's (ASABE/ICC) 802-2014 "Landscape Irrigation Sprinkler and Emitter Standard, All sprinkler heads installed in the landscape must document a distribution uniformity low quarter of 0.65 or higher using the protocol defined in ASABE/ICC 802-2014.

2.12 HARD PIPED POINT TO POINT DRIP IRRIGATION:

A. Riser Assembly For Hard Piped Point to Point Drip Irrigation:
   1. As specified on drawings.

B. Emitters For Hard Piped Point to Point Drip Irrigation:
   1. As specified on drawings.

2.13 SUB SURFACE DRIP IRRIGATION:

A. Drip Tubing For Subsurface Drip Tubing:
   1. As specified on drawings.

B. Pressure Regulator Valves For Subsurface Drip Tubing:
   1. As specified on drawings.

C. Air/Vacuum Relief Valves for Subsurface Drip Tubing:
   1. As specified on drawings.

2.14 CHECK VALVES:

A. Existing.

2.15 FLUSH VALVE ASSEMBLIES:

A. Existing.

2.16 VALVE BOXES:

A. Rectangular valve boxes shall be 9-1/2 inch wide by 16 inch long and 11 inch high. Round valve boxes shall be 10-inch diameter and 10 1/4 inch. All valve boxes shall be constructed of rigid polyolefin.

B. Valve boxes shall have locking covers secure with a 3/8-inch stainless steel bolt and washer.

C. Rectangle valve boxes shall be used for control valves, master control valves, pressure regulators, flow sensors, wye strainers, filtration devices, ball valves and pull boxes.

D. Round valve boxes shall be used for gate valves quick coupler valves, flush valve assemblies and spare wires.

E. All valve boxes to be green in color unless otherwise specified for use of reclaimed water. All valve boxes for reclaimed water shall be purple in color and bare the reclaimed water warnings as well as the international "Do Not Drink" symbol.

F. Heat brand all box lids with the appropriate two-inch high identification letters and/or numbers.

G. All valve boxes shall receive landscape fabric. Landscape fabric shall be constructed of 5.0 oz. weight proven polypropylene weed barrier with burst strength of 225 P.S.I. and capable of 12 gallons per minute of water flow and puncture strength of 60 lbs. Dewitt Pro, Mirify or approved equal.

H. All valve boxes shall receive 2 cubic feet of 3/4-inch gravel.

I. Valve Tag: Manufactured from UV stabilized plastic with 180lbs pull out resistance and hot stamped for maximum visibility. Top hole shall be designed to pass a 16 gauge or smaller solenoid pigtail or attach with a nylon tie.

2.17 AUTOMATIC CONTROLLER UNIT

A. Existing.

2.18 ELECTRIC CONTROL VALVE WIRE

A. Low Voltage:
   1. AWG UF UL approved No. 14 direct burial copper wire for all control wires and No. 14 direct burial copper wire for all common wires.
   2. Wire Colors:
      (a) Control Wires- As specified on drawings
      (b) Common Wires- As specified on drawings.
      (c) Master Valve Wires- Blue.
      (d) Spare Wires- Green (labeled at termination)
   3. Wire Splice Connectors: 3M DBY Direct Bury Splice Kits.

B. High Voltage:
   1. Type required by local codes and ordinances, of proper size to accommodate needs of equipment serviced.

2.19 PIPE JOINT RESTRAINTS

A. All pressure line fittings 4 inch and larger shall be iron ductile deep bell type constructed of grade 65-45-12 and shall be in accordance with ASTM A536. Rubber for gaskets in fittings shall be in accordance with ASTM-477. All iron ductile fittings shall have stainless steel exterior lugs to secure a joint restraint system.

2.20 SAND BEDDING

Sand bedding shall be construction grade.

NO.	REVISIONS	APPROVED	DATE

IN-SITE LANDSCAPE ARCHITECTURE, INC.
2907 Shelter Island Drive #105-417
San Diego, CA 92106 619-795-7603 www.insitelandarch.com

DRAWN BY RM/TJ
CHECKED BY TJ

LICENSED LANDSCAPE ARCHITECT
Eric Jachlewski Jr.
No. 4847
11-30-23
12-12-23
STATE OF CALIFORNIA

APPROVED BY CITY OF PALM DESERT
DATE

CITY OF PALM DESERT, CALIFORNIA
PALMA VILLAGE PARK – SHADE STRUCTURE PROJECT
IRRIGATION SPECIFICATIONS
PORTION OF N 1/2 OF SEC. 15, T. 5 S., R. 7 E., S.B.M.

DATE: 12-12-23 100% CONSTRUCTION DOCUMENTS

PART 3 - EXECUTION

3.01 PREPARATION

A. Examine field conditions prior to beginning work described in this section. Grading operations shall be completed and approved prior to beginning work.

B. Verify all sleeve locations below future hardscape and/or across concrete v-ditches prior to beginning work in this section. Flag all existing sleeves and conduits installed by other trades. Report any conflicts and discrepancies to the landscape architect immediately.

C. Irrigation system shall be constructed to the sizes and grades at the locations shown on the drawings. Mark with powdered lime or marking paint routing of pressure supply line and stake the location of each head, rotor, electric control valve and other related equipment for the first three zones. Landscape architect shall review staking and direct any necessary changes with the contractor prior to proceeding to other zones. This review does not in any way alleviate the contractor from the responsibilities associated with proper uniformity and distribution of head placement after staking.

D. Install sleeves, to accommodate pipes and wires, under paving, hardscape areas, sidewalks, and paths prior to asphalt and concrete operations. Compact backfill around sleeves to 95% Modified Proctor Density within 2% of optimum moisture content in accordance with ASTM D1557.

3.02 EXCAVATION AND BACKFILLING OF TRENCHES

A. Trench excavation shall as much as possible follow the layout shown on the drawings. Trenches shall be straight in alignment and support pipe continuously on bottom of trench. Remove rocks and debris greater than 1" in diameter. Over excavate as required for bedding material.

B. Depth of Trench (in landscape areas):

1. Pressure Supply Line: 24" from top of pipe to finish grade.
2. Non-Pressure Line: 12" from top of pipe to finish grade.
3. Control Wiring: directly at side and bottom of pressure supply line.
4. Pressure Supply line Locator Tape: 6" above top of pipe.

C. Depth of Trench (under asphalt, paving, or concrete):

1. Pressure Supply Line: 36" from top of pipe to finish grade.
2. Non-Pressure Line: 24" from top of pipe to finish grade.
3. Control Wiring: directly at side and bottom of pressure supply line.
4. Pressure Supply line Locator Tape: 6" above top of pipe.
   (a) Piping located under asphalt paving or concrete shall be installed with the appropriate sized sleeve and backfilled with sand bedding (6" below pipe and 6" above pipe).
   (b) Compact backfill material in 6" lifts at 90% maximum density determined in accordance with ASTM D1557 using manual or mechanical tamping device.
   (c) Set in place, cap, and pressure test piping in the presence of the owner or owner's representative prior to backfilling.

D. Width of Trench:

1. Pipe Greater than 3": 14" minimum.
2. Pipe Less than 3": 7" minimum.

E. Width between Trenches:

1. Irrigation Trench to Irrigation Trench: 6" minimum.
2. Irrigation Trench and other Trade Trenches: 12" minimum.

F. Boring: Boring will only be permitted where pipe must pass under an obstruction that cannot be avoided or removed. Backfill shall match surrounding soil density and grain. Boring under existing paving, sidewalks, or hardscape may be permitted at contractor's own risk. Contractor is responsible for any repairs or damage to such items at their own expense.

G. Backfilling: Backfilling of trenches may not be done until all required testing for the irrigation system has been completed.

1. Material: Excavated material is generally considered to be adequate for backfilling operations. Before beginning the backfilling operation, insure that backfill material is free from debris and rocks greater than 1" in diameter. These materials after separated from backfill, shall be legally disposed of at contractor's expense.
2. Bedding: Bed pressure supply line with construction grade sand 6" above and 6" below pipe as shown on details. Remaining backfill may be as described above.
3. Bed all electrical control wire trenched separate from pressure supply line, with construction grade sand 6" above and 6" below wires.
4. When backfilling, slightly mound filled trenches for settlement after backfilling is compacted. Compact backfill to a 90% maximum density in accordance with ASTM D1557 with a mechanical tamper. Do not leave trenches open for a period greater than 48 hours. Open trenches shall be protected in accordance with current OSHA regulations.
5. Smooth trenches to finish grade prior to requesting a walk through for substantial completion with the landscape architect.

3.03 POINT OF CONNECTION(S)

A. Existing.

3.04 INSTALLATION OF SOLVENT WELD POLYVINYL CHLORIDE PIPE (PVC)

A. Polyvinyl chloride pipe shall be cut with an approved PVC pipe cutter designed only for that purpose.

B. All plastic-to-plastic solvent weld joints shall use only the solvent recommended by the pipe manufacturer. Do not install solvent weld pipe when temperature is below 40° F.

C. Pipe ends and fittings shall be wiped with MEK, or approved equal, before welding solvent is applied. Welded joints shall be given a minimum of 15 minutes to set before moving or handling.

D. Pipe shall be snaked from side-to-side on trench bottom to allow for expansion and contractions.

E. All changes of direction over 15 degrees shall be made with appropriate fittings.

F. When pipe laying is not in progress at the end of each working day, close pipe ends with tight plug or cap.

G. Install pressure supply line locating tape along the entire length of pressure supply line.

H. Coordinate pressure supply line with sand bedding operations.

I. No water shall be permitted in the pipe until inspections have been completed and a period of at least 24 hours has elapsed for solvent weld setting and curing.

J. J. Center load pipe with small amount of backfill to prevent arching and slipping under pressure. Leave joints exposed for inspection during testing.

3.05 CHECK VALVES

A. Install swing check valves as specified on drawings.

B. Install spring check valves as specified on drawings.

3.06 VALVE BOXES

A. Install valve boxes with each type of irrigation equipment so that top of valve box is above finish grade as specified on the detail drawings. Valve box extensions are not acceptable.

B. Place gravel sump below and around each valve box prior to installing valve box as specified on the drawings. Place remaining portion of gravel inside valve box allowing full access in and around all fittings. Valve box shall be fully supported by gravel sump. No wood supports are allowed.

C. Brand valve box lid of associated equipment as follows:

1. Electric control valve box lid with "Controller Letter and Station Number".
2. Quick coupling valve box lid with the letters "QC".
3. Isolation ball valve box lid with the letters "BV".
4. Air relief valve box lid with the letters "AR".
5. Spare Wire box lids with the letters "SW"
6. Wire Splice box lid with the letters "WS".
   (a) Letter and number size of brand shall be no less than 1" and no greater than 1 1/2" in height and shall be 1/8" maximum in depth. Provide sample branding to the owner or owner's representative prior to commencement of work.

D. Walk through for substantial completion will not be allowed until all branding is complete.

3.07 ELECTRICAL WIRE

A. Low Voltage Wiring:

1. Bury control wiring in same trench as pressure supply line as specified.
2. Bundle all 24 volt wires at 20' intervals with electrical tape.
3. Provide expansion loops at every pressure supply line angle fitting, inside each electric remote control valve box, and at 250' length intervals along routing. Form expansion loop by wrapping wire a minimum of 10 times around a 3/4" pipe and withdrawing pipe as specified on the drawings.
4. Limit splicing of electrical wiring. Provide each splice made at intervals or in electric control valve and drip valve assembly valve boxes with 3M DBY Direct Bury Splice Kits.
5. Wire splices occurring at intervals outside electric control valve boxes shall be installed in a separate valve box.
6. Provide (1) one electrical control wire for every electric control valve. Piggy backing like zones on the same electrical control wire is not allowed.
7. Install (2) two spare #14-1 electrical control wires from the automatic controller unit pedestal to the last electric control valve on each leg of pressure supply line. Locate the spare wires in their own valve box. In addition to these spare wires, check the drawings for any additional wires that may be required and locate them in the same valve box as the spare wires.

B. High Voltage Wiring:

1. Install 120 volt power from power source to automatic controller unit following local governing codes and ordinances.

3.08 QUALITY CONTROL

A. Preconstruction Meeting: The contractor is responsible for contacting the landscape architect prior to beginning construction and/or ordering materials to establish a meeting to review and discuss project objectives, concerns and to review the construction documents to insure a complete understanding of required installation procedures.

B. General Observation: The landscape architect will visit the construction site at interim times during the construction process to access construction progress regarding installation of irrigation equipment to be in compliance with the drawings, details, specifications and site conditions. The landscape architect will prepare a site report after each visit noting progress of installation, verbal communication with the contractor and identifying any field adjustments necessary which require modifications to the designed irrigation system. A copy of this site report will be delivered to both the owner and the contractor. The contractor is responsible to immediately address each item on the site report before proceeding with further construction.

C. Pressure Testing the Pressure Supply Line: After backfilling, flushing, and prior to the installation of each electric control valve, isolation ball valve and quick coupling valve the irrigation system shall be pressure tested.

1. Pressure testing shall be performed in the presence of the landscape architect and owner or owner's representative utilizing the following procedure:
   (a) Pressurize the irrigation system to 150 psi for a period of no less than 3 hours. The pressure gauge used for the pressure test shall not exceed readings greater than 300psi. Pressure pump and other equipment necessary for the test shall be furnished by the contractor.
   (b) Test is acceptable if no leakage occurs within the system for the duration of the testing period.
   (c) If leaks occur, repair said leaks and begin pressure test again. Repeat this operation until no leaks occur in the irrigation system.
   (d) Before requesting a walk through for substantial completion, the entire irrigation system shall remain under pressure for a period of no less than 48 hours.
2. The contractor is responsible for notifying the landscape architect three days in advance of the pressure test.

D. Flushing: Center load all piping prior to flushing. After all new irrigation piping and risers are in place and connected and all necessary diversion work has been completed and prior to the installation of sprinkler heads, rotors and quick coupling valves, thoroughly flush piping system under full head of pressure. After the furthermost riser from the point of connection begins to flush, continue flushing for a duration of five minutes. After the system is thoroughly flushed, cap all risers.

E. Walk Through For Substantial Completion:

1. Before requesting a walk through for substantial completion the following requirements must be entirely satisfied:
   (a) The entire irrigation system is completely installed, flushed and satisfactorily pressure tested. If the contractor failed to notify the landscape architect for the pressure test and flushing procedures stated above than the contractor assumes full responsibility for any design modifications directed by the landscape architect during the walk through for substantial completion regarding pressure and flushing issues.
   (b) All valve boxes have been branded.
   (c) All automatic controllers are fully operable and communication has been certified in writing and checked at central control system by the central control system manufacturer on their letter head.
   (d) Record as-built drawings have been submitted to the landscape architect for review as to completeness.
   (e) (4) Four Services manuals have been delivered to the owner or owner's representative.
2. Once the above requirements have been met a walk through for substantial completion may be requested. The following procedures will be used during the walk through:
   (a) Contractor must have (2) two personnel available with radio communication for the entire length of the walk through.
   (b) All valve box lids shall be removed from valve boxes and placed face up adjacent to the valve box prior to beginning the walk through.
   (c) The walk through will be divided into (2) two sections and proceed as follows:
      (1) Visual Walk Through: This will consist of walking through the entire irrigation system and examining all components of the system without turning on zones. A punch list will be established of deficiencies in the construction and workmanship of the irrigation system as compared to the construction drawings, details, and specifications.
      (2) Operational Walk Through: This will consist of walking through the entire irrigation system observing each zone in a fully operable condition. Valves must be activated from the automatic controller unit (Manual bleeding of individual electric control valves will not be acceptable). A punch list will be established of deficiencies in the operation of each zone in the irrigation system evaluating but not limited to head spacing, row spacing, nozzle sizing, correct radius of throw, correct stationing, as compared to the construction drawings, details, and specifications.
3. Once the Walk Through for Substantial Completion has been completed the landscape architect will provide a copy of all punch list items to the owner for review and distribution to the contractor. It is the contractor's responsibility to repair, replace, and adjust all items on the punch prior to requesting a final walk through.

F. Final Walk Through:

1. Before commencement of a final walk through is requested, the following requirements must be entirely satisfied:
   (a) Each item on the walk through for substantial completion has been thoroughly addressed and resolved by the contractor.
   (b) All final record as-built drawings and controller charts have been produced for review by the landscape architect and contractor at the final walk through.
2. Once the above requirements have been met a final walk through may be requested. The following procedures will be used:
   (a) Contractor must have (2) two personnel available with radio communication for the entire length of the walk through.
   (b) Only those valve box lids shall be removed from valve boxes as indicated on the walk through for substantial completion punch list.

   The valve box lids shall be placed faced up adjacent to the valve box prior to beginning the final walk through.
   (c) The final walk through will be divided into (2) two sections and proceed as follows:
      (1) Visual Walk Through: This will consist of walking through the punch list items created at the time of the walk through for substantial completion, examining all components of the system without turning on zones. Any remaining deficiencies in the construction and workmanship of the irrigation system as compared to the punch list generated at the time of the walk through for substantial completion, construction drawings, details and specifications will be noted.
      (2) Operational Walk Through: This will consist of walking through the punch list items created at the time of the walk through for substantial completion and observing each zone in a fully operable condition. Valves must be activated from the automatic controller unit (Manual bleeding of individual electric control valves will not be acceptable). Any remaining deficiencies in the operation of each zone in the irrigation system including but not limited to head spacing, row spacing, nozzle sizing, correct radius of throw, correct stationing as compared to the punch list generated at the time of the walk through for substantial completion construction drawings, details, and specifications.
3. Once the Final Walk Through is completed and all items created on the final punch list have been addressed the maintenance period may begin. Any additional walk throughs required due to contractors' inability to address all issues on the punch lists described above will be provided at the contractor's expense.

3.08 MAINTENANCE PERIOD

A. The Maintenance Period shall be for ninety (90) days after notification from the landscape architect of a successful final walk through and will begin once all items on the final walk through punch list have been satisfactorily addressed by a written statement indicating such from the landscape architect to the owner.

1. The contractor is responsible for obtaining and following any maintenance manuals created specifically for the project from the owner at the beginning of the maintenance period.
2. At the end of the maintenance period and prior to turning the project over to the owner, the contractor shall deliver the following to the owner:
   (a) Five (5) pop-up spray heads with nozzles of each type used, for every 100 pop-up spray heads installed on the project.
   (b) Five (5) rotor heads with nozzles of each type used, for every 100 rotors installed on the project.
3. Once the contractor has fulfilled all maintenance agreement obligations and has provided the above items to the owner, the maintenance period will end see section 320533 Landscape Maintenance, for maintenance responsibilities.

B. Refer to the Maintenance Specifications for weather-based or soil moisture-based controller settings during the maintenance period.

END OF SECTION 328400

DATE: 12-12-23 100% CONSTRUCTION DOCUMENTS

NO.	REVISIONS	APPROVED	DATE

IN-SITE LANDSCAPE ARCHITECTURE, INC.
2907 Shelter Island Drive #105-417
San Diego, CA 92106 619-795-7603 www.insitelandarch.com

DRAWN BY RM/TJ
CHECKED BY TJ

LICENSED LANDSCAPE ARCHITECT Tom Jachlewski No. 4847 Exp. 11-30-25 12-12-23 STATE OF CALIFORNIA

APPROVED BY CITY OF PALM DESERT

DATE

CITY OF PALM DESERT, CALIFORNIA
PALMA VILLAGE PARK – SHADE STRUCTURE PROJECT
IRRIGATION SPECIFICATIONS
PORTION OF N 1/2 OF SEC. 15, T. 5 S., R. 7 E., S.B.M.